TANDBERG® TCA 3008A

Circuit Diagrams with Alignment Instructions and Illustrated Parts List

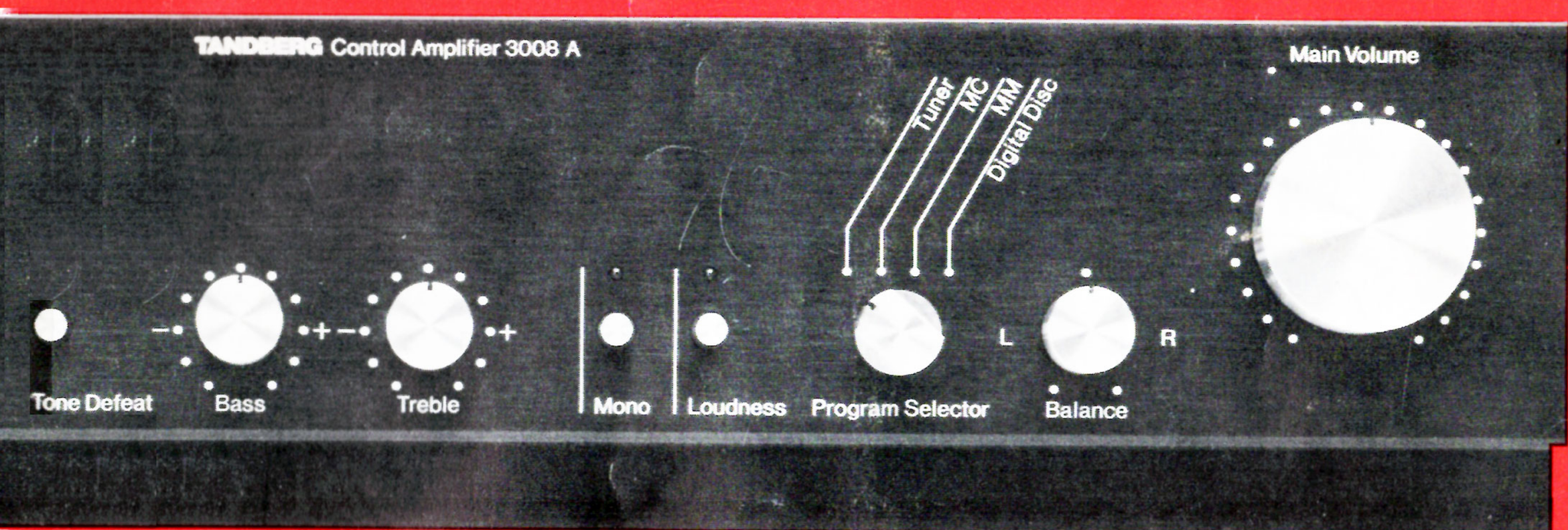

Contents

	Page
Dismantling	2
Pc. boards and circuit diagrams	3
Technical data	8
Parts List	9

Dismantling

- Top cover, rear (1).
- Top cover, front (2).
- Rear panel (3).
- Front panel (4). Remove rotary knobs.
- Bottom cover (5).

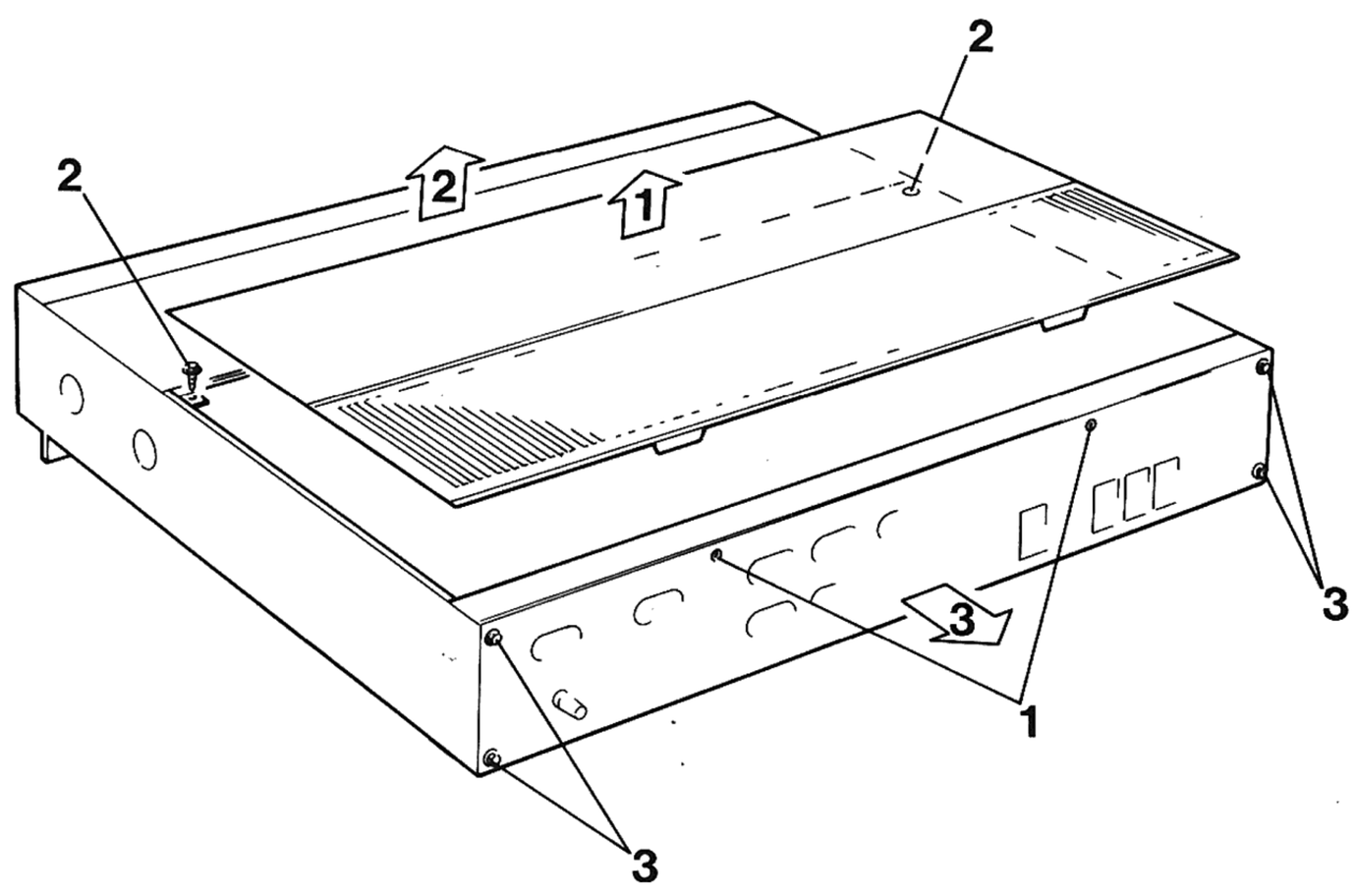

Dismantling the rear and top covers.

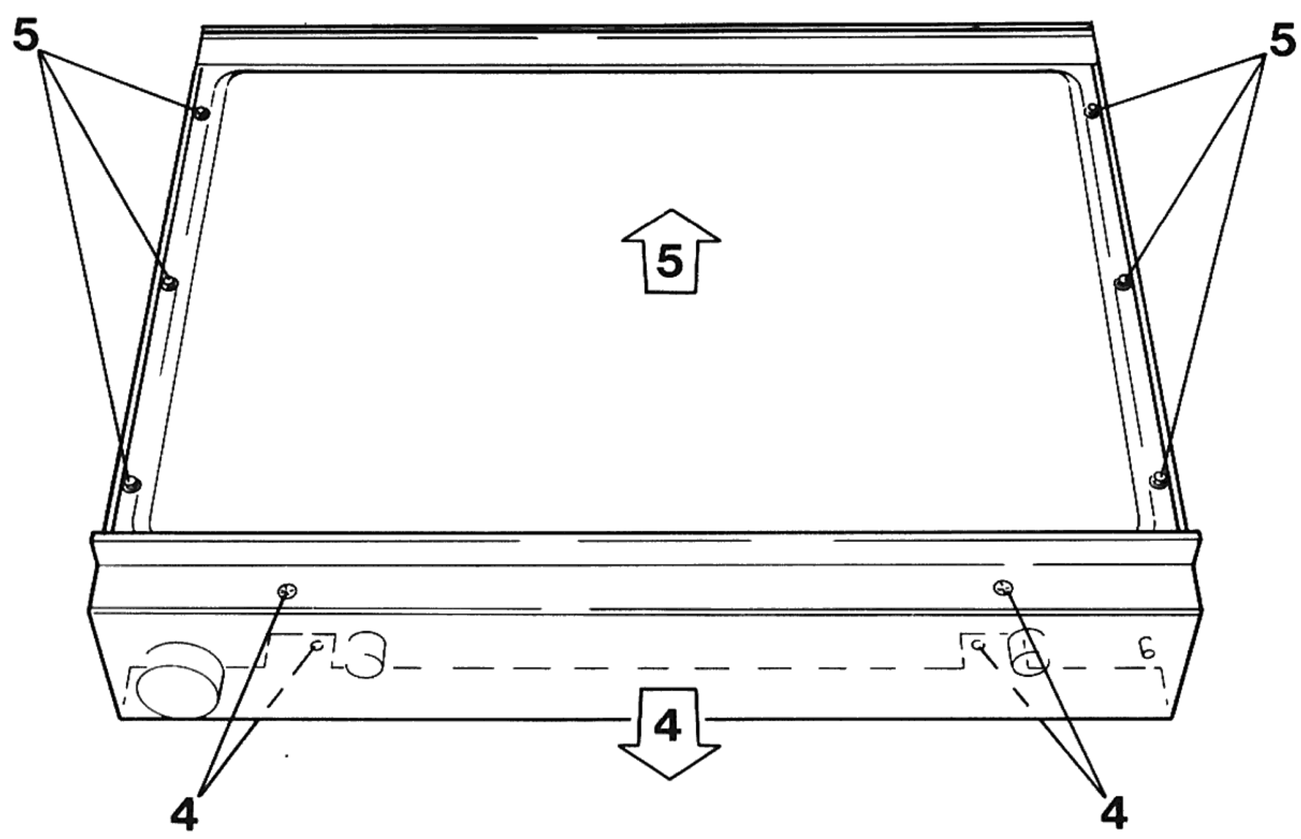

Dismantling the front and bottom covers.

www.hifiengine.com

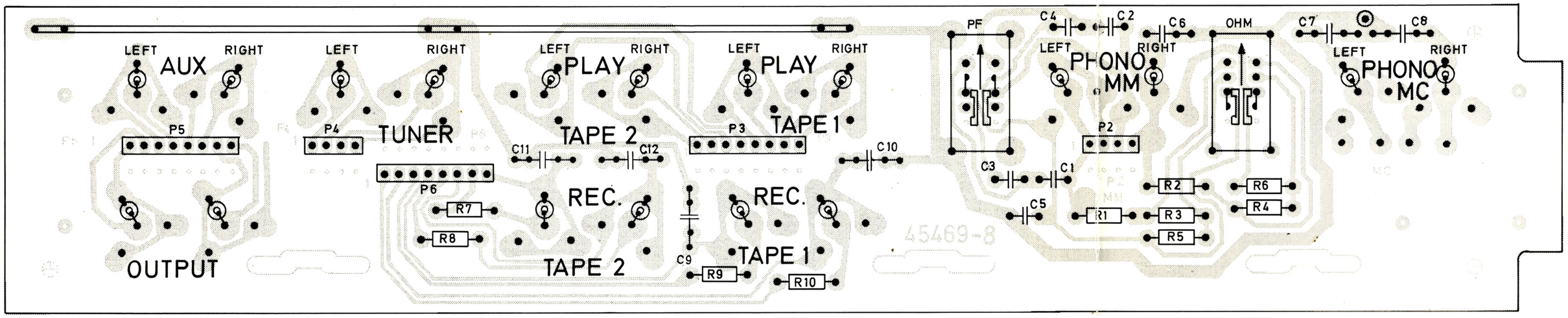

Connector board, solder side

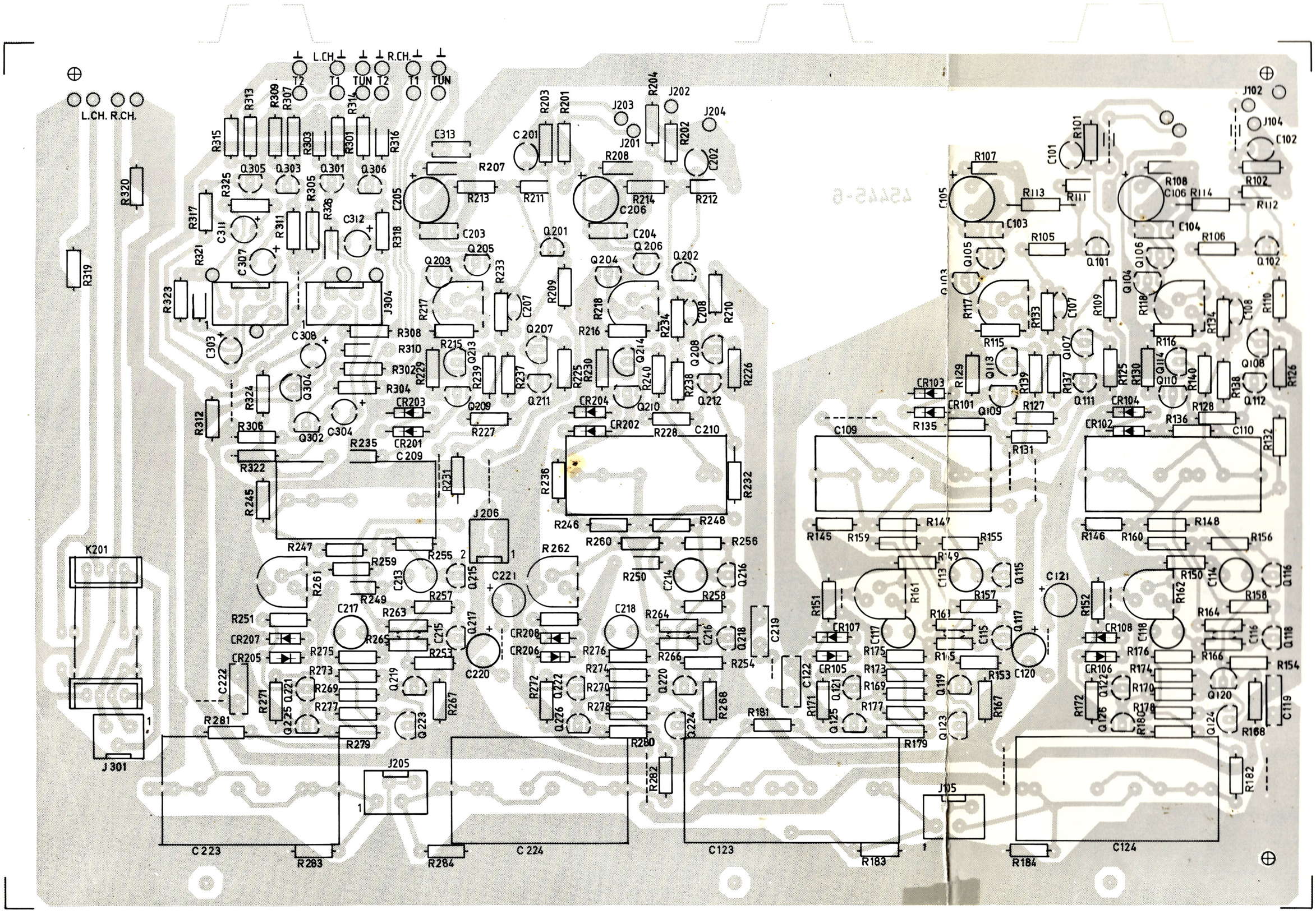

Input RIAA board, component side

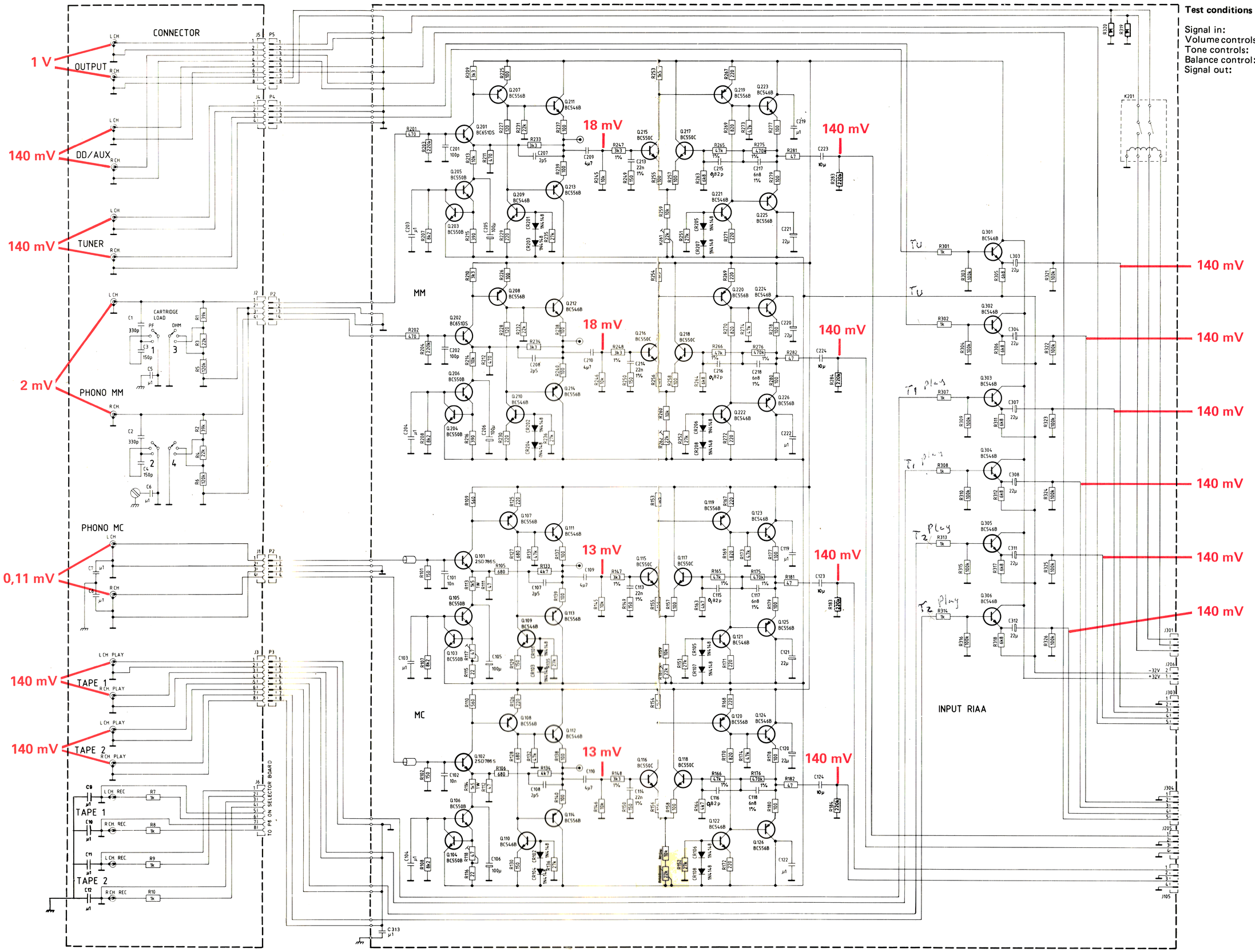

Circuit diagram, input amplifiers

TEST POINTS WITH AC–VOLTAGES IN COLOUR

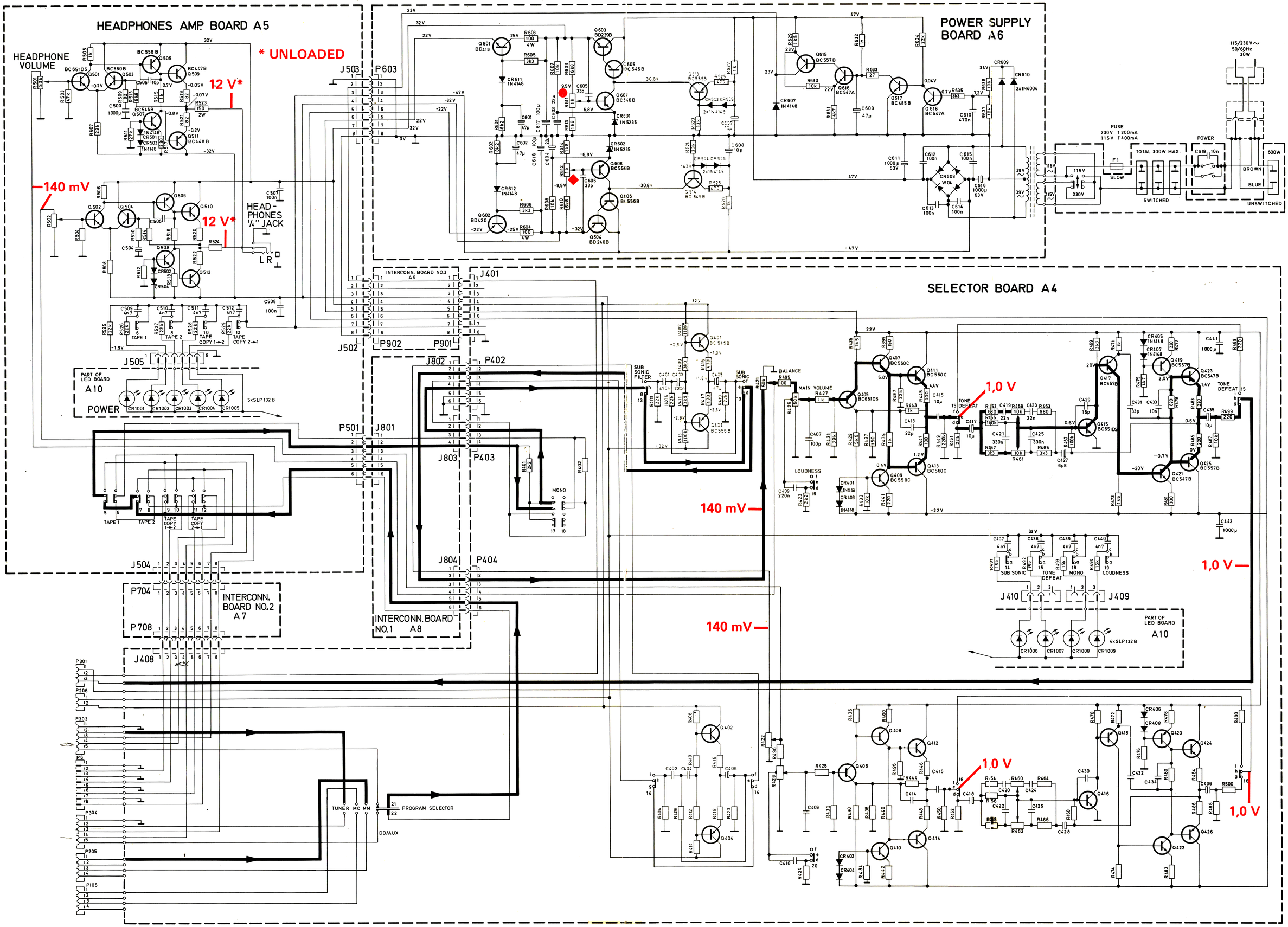

Circuit diagram, headphones amplifier, tone controls and power supply

TEST POINTS WITH AC–VOLTAGES IN COLOUR

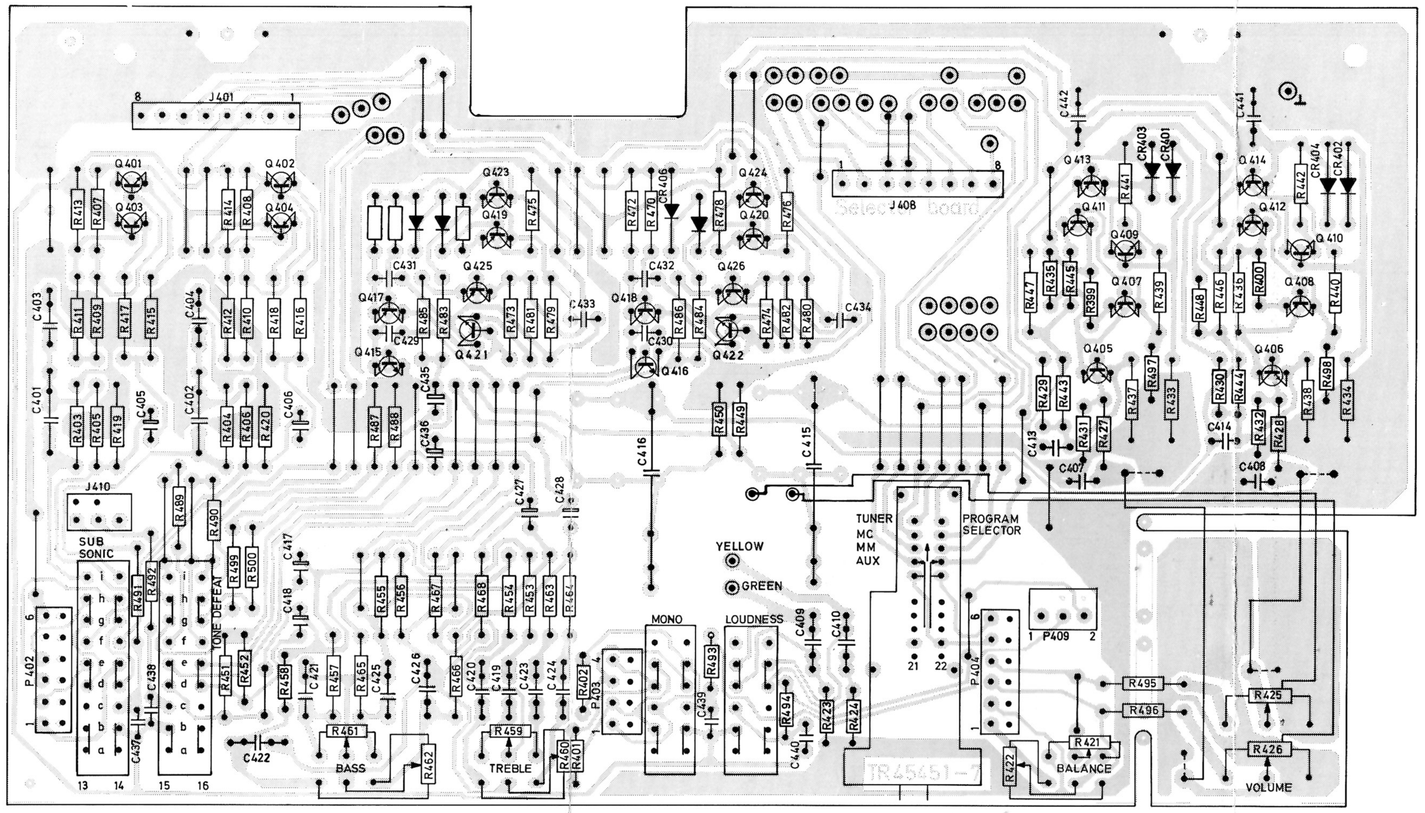

Selector board, solder side

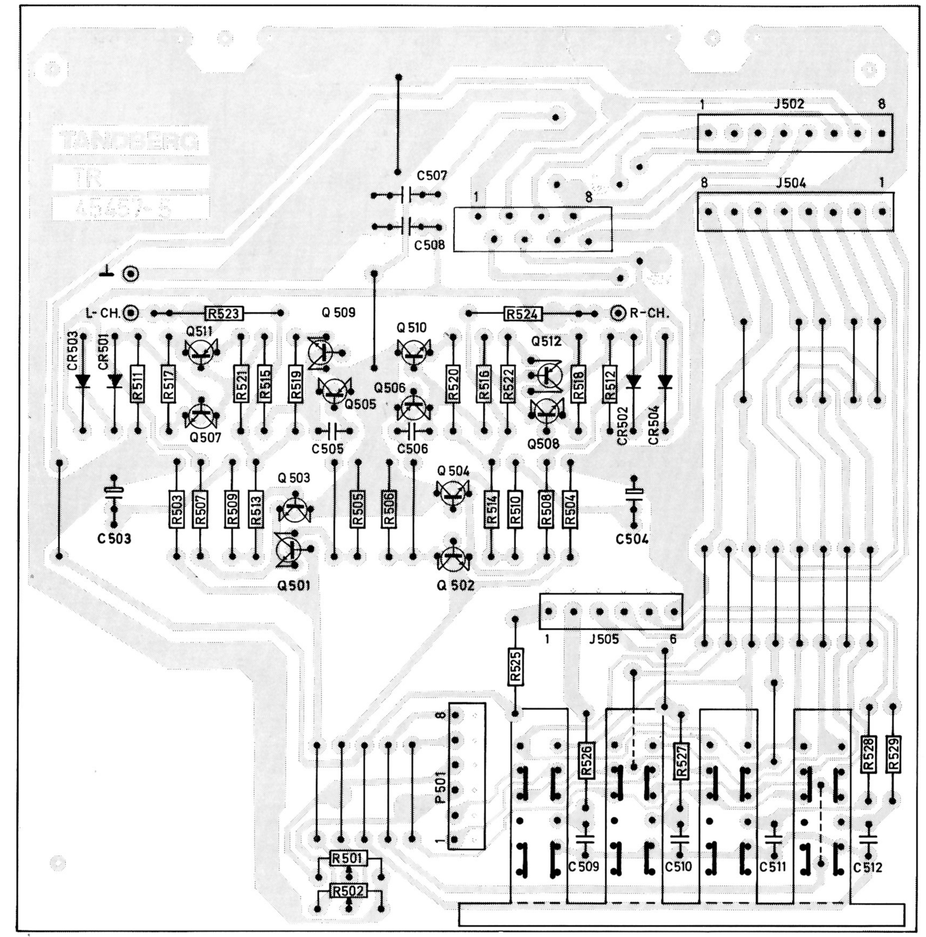

Headphones amplifier board,solder side

LED board, solder side

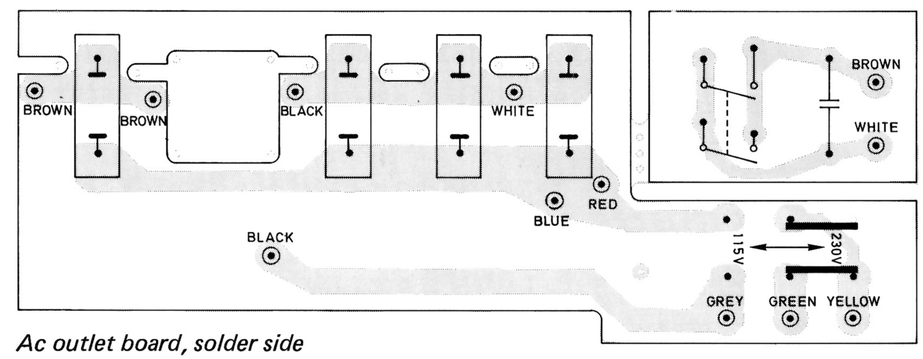

Ac outlet board, solder side

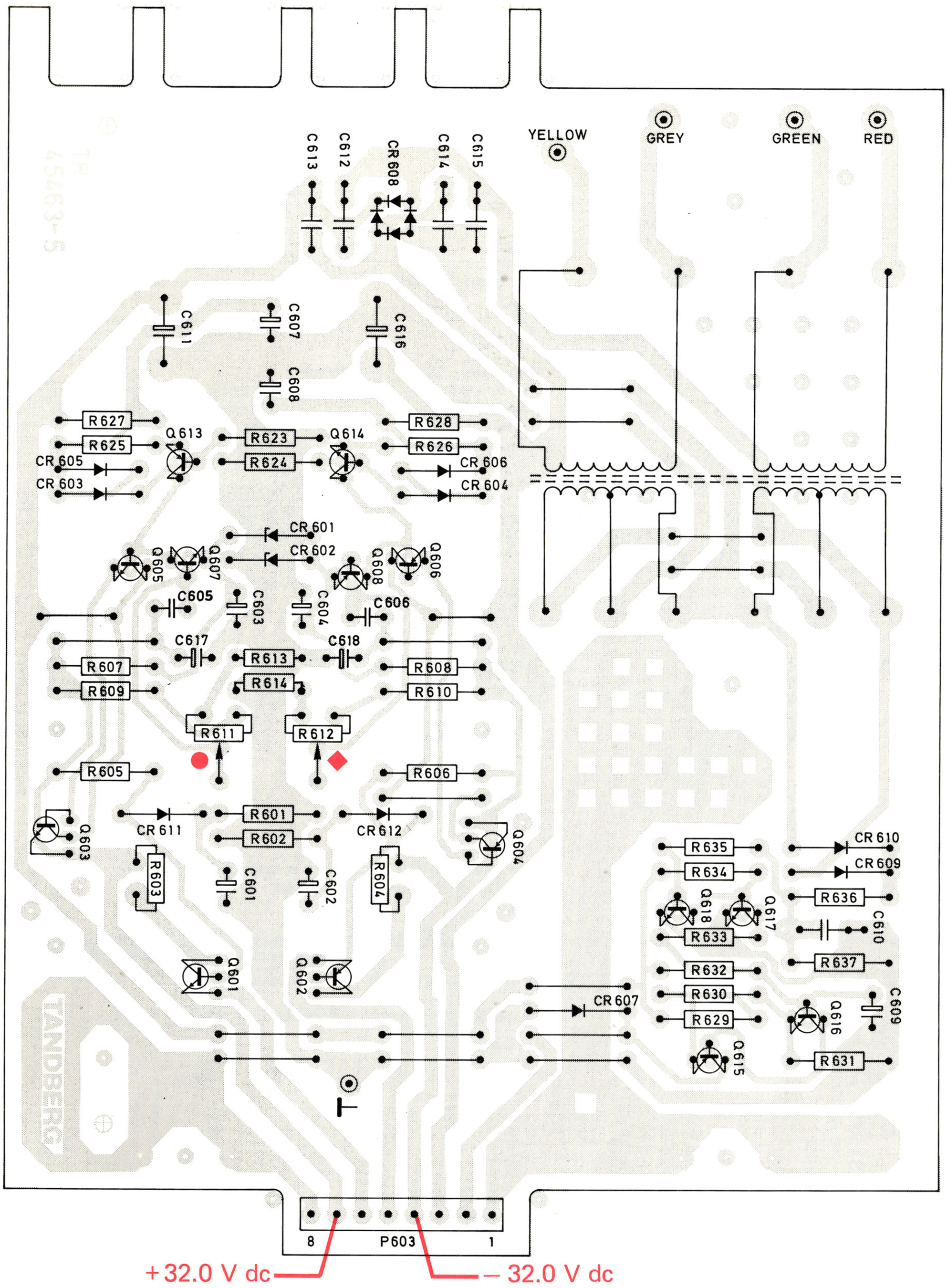

Power supply board, solder side

Adjusting the supply power (± 32 V)

● Adjust R611 for + 32.0 V at pin 7, J503 (Figure 10).

◆ Adjust R612 for – 32.0 V at pin 4, J503 (Figure 10).

Technical data

Power requirements:	115/230 V ± 10%, 50/60 Hz	
Power consumption:	30 W max.	
Ac.-outlets:	Unswitched	1
	Switched	3
Dimensions: Width	17 1/8" (43.5 cm)	
Depth	13 ¾" (35.0 cm)	
Height	3 ¼" (8.3 cm)	
Weight	12.5 lbs (5.7 kg)	

Technical Data according to IHF-A-202, 1978

Frequency response

Phono MM:	20 – 20,000 Hz	±0.2 dB
Phono MC:	20 – 20,000 Hz	±0.2 dB
Tape 1, Tape 2:	20 – 20,000 Hz	+ 0/– 0.1 dB
Tuner, Digital Disc:	20 – 20,000 Hz	+ 0/– 0.1 dB

Maximum Voltage Output

Preamp output:	5 V at THD = 0.004%
Preamp output:	10 V at clipping level
Tape 1, Tape 2:	7.5 V
Headphone output:	20 V unloaded

Total Harmonic Distortion (20 Hz – 20,000 Hz)

Phono MM:	<0.004%
Phono MC:	<0.004%
Tape 1, Tape 2, Tuner:	<0.007%
Digital Disc:	<0.003%

Input Sensitivity – Ref; 0.5 V output voltage

Phono MM:	1 mV
Phono MC:	60 uV
Tape 1, Tape 2:	70 mV
Tuner, DD/AUX:	70 mV

A-weighted Signal-to-Noise Ratio

Phono MM:	78 dB
Phono MC:	74 dB
Tape 1, Tape 2:	95 dB
Tuner, DD/AUX:	95 dB

Maximum Input Voltage (1 kHz)

Phono MM:	290 mV
Phono MC:	17 mV
Tape 1, Tape 2:	11 V
Tuner, DD/AUX:	11 V

Input Impedance

Phono MM:	33 / 47 / 100 kohms
Phono MC:	150 ohms
Tape 1, Tape 2, Tuner:	100 kohms
DD/AUX:	13 kohms

Secondary Disclosures

Output Impedance

Preamp:	220 ohms + 10 uF in series
Headphones:	150 ohms
Headphones (min. load):	4 ohms

Tone-control Response

Bass:	± 9 dB at 50 Hz
Treble:	± 10 dB at 10,000 Hz
Loudness:	Max. 7 dB at 50 Hz

Filter

Sub Sonic:	– 12 dB/oct., – 3 dB at 15 Hz

Crosstalk (100 Hz – 10 kHz)

Phono MM:	To any of the other sources > 70 dB
Phono MC:	To any of the other sources > 70 dB
Tape 1, Tape 2:	To any of the other sources > 70 dB
Tuner, Digital Disc:	To any of the other sources > 70 dB

Separation (100 Hz – 10 kHz)

Phono MM:	> 53 dB
Phono MC:	> 53 dB
Tape 1, Tape 2:	> 58 dB
Tuner, Digital Disc:	> 58 dB

Transient intermodulation

All inputs:	Immeasurable

Other Technical Data

Frequency Response

Tape 1, Tape 2:	1.6 – 250,000 Hz + 0/– 3 dB
Tuner, Digital Disc:	1.6 – 250,000 Hz + 0/– 3 dB

Phase shift (20 Hz – 20,000 Hz)

Tape 1, Tape 2:	+ 5°/– 5°
Tuner, Digital Disc:	+ 5°/– 5°

– Specifications are subject to change for further improvement without notice.

Optional Extras

– Black acrylic side walls for freestanding units.

– Attachment sets for installation in 19 inch racks.

www.hifiengine.com

Parts list

Switches and connectors

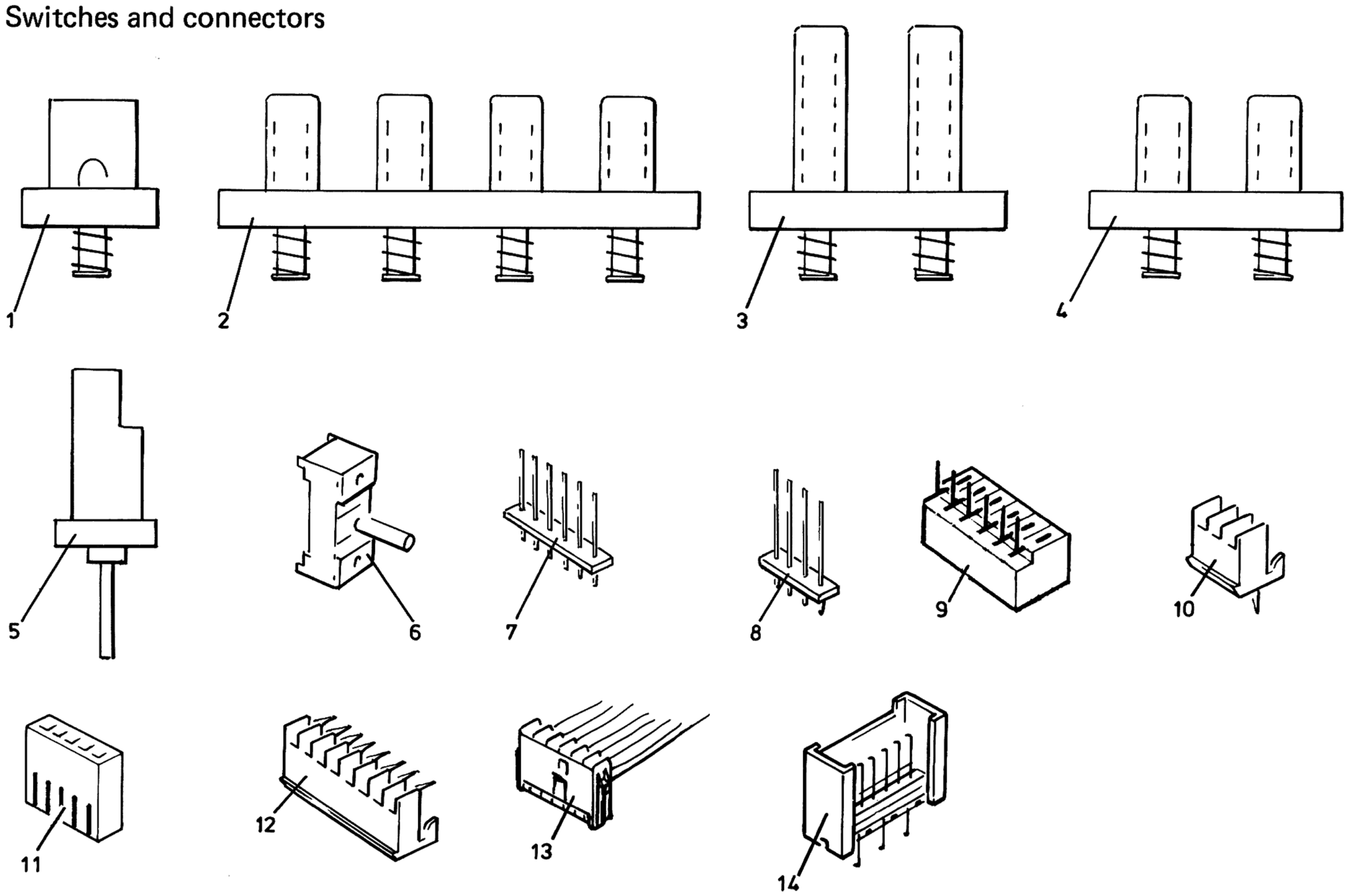

Index	SPECIFY THIS WHEN ORDERING Order No.	Beskrivelse	Description (notes)	Reference
		Vendere	Switches	
1	370992	Bryter	Switch	POWER
2	370367	Vender	Switch, push	TAPE, TAPE COPY
3	372048	Vender	Switch, push	SUB SONIC FILTER, TONE DEFEAT
4	373729	Vender	Switch, push	MONO, LOUDNESS
5	372471	Vender	Switch, rotary	PROGRAM SELECTOR
6	370790	Vender	Switch, toggle	OMH, PF
		Kontakter	Connectors	
7	379992	Plint	Connector, fixed, 6 pole	Molex 3192A
	378311	Plint	Connector, fixed, 8 pole	Molex 3192A
8	401723	Plint	Connector, fixed, 2 pole	Molex 3192B
	377959	Plint	Connector, fixed, 4 pole	Molex 3192B
	376278	Plint	Connector, fixed, 6 pole	Molex 3192B
9	417915	Kontakt	Connector, 4 pole	CIS 163, AMP
	337658	Kontakt	Connector, 8 pole	CIS 163, AMP
10	377040	Kontakt	Connector, fixed, 3 pole	Molex 3215B
	376551	Kontakt	Connector, fixed, 4 pole	Molex 3215B
	314828	Kontakt	Connector, fixed, 6 pole	Molex 3215B
11	417735	Kontakthus	Housing, 4 pole	CIS 163, AMP
	319541	Kontakthus	Housing, 8 pole	CIS 163, AMP
12	375301	Kontakt	Connector, fixed, 8 pole	Molex 3215A
13	411714	Kontakt	Connector, 2 pole	MTO-826 371, AMP
	411712	Kontakt	Connector, 3 pole	MTO-826 371, AMP
	411716	Kontakt	Connector, 4 pole	MTO-826 371, AMP
	411708	Kontakt	Connector, 5 pole	MTO-826 371, AMP
	411140	Kontakt	Connector, 8 pole	MTO-826 371, AMP
14	411728	Plint	Connector, 2 pole	MTO-826 379, AMP
	411721	Plint	Connector, 3 pole	MTO-826 379, AMP
	411736	Plint	Connector, 4 pole	MTO-826 379, AMP
	411738	Plint	Connector, 5 pole	MTO-826 379, AMP
	411143	Plint	Connector, 8 pole	MTO-826 379, AMP

www.hifiengine.com

Cabinet assembly

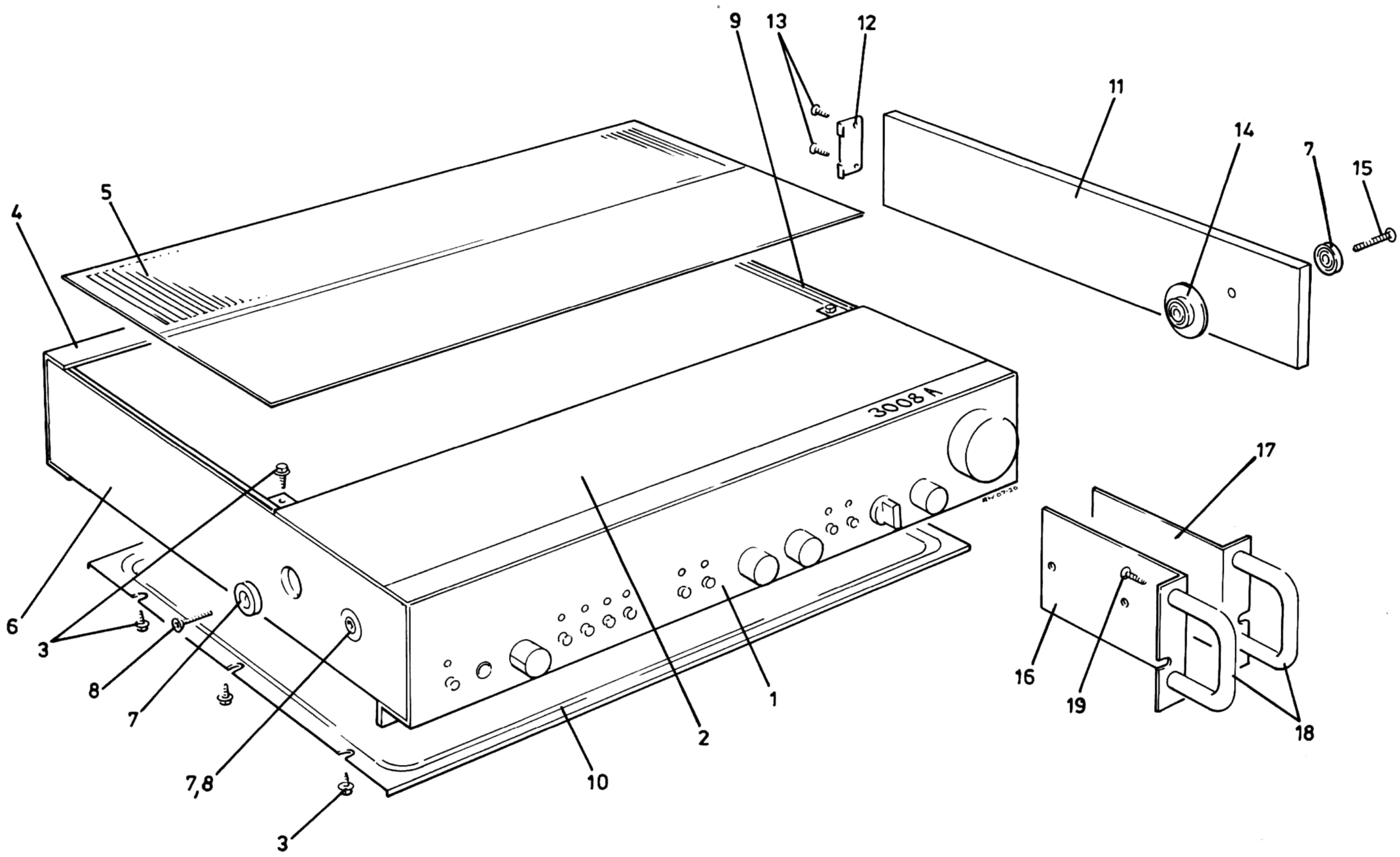

Index	SPECIFY THIS WHEN ORDERING Order No.	Beskrivelse	Description (notes)	Reference
		Kabinett-enhet	Cabinet assembly	
1	429670	Skinne	Plate, front	
2	412581	Plate	Plate, top-front	
3	346854	Skrue	Screw, M3.5 x 6.3 hex hd, with collar	
4	424672	Skinne	Panel, back	
			(see pages 14 and 15, index 1)	
5	412579	Plate	Plate, top	
6	375969	Skinne	Plate, side, left	
7	400602	Hylse	Spacer, black plastic	
8	401105	Skrue	Screw, M4 x 16 csk hd, black	
9	406816	Skinne	Plate, side, right	
10	375258A	Plate	Plate, bottom	
			Extra side panels.	
11	408921	Plate	Panel, side	
12	405875	Vinkel	Bracket, side panel	
13	409661	Skrue	Screw, 3/8" No. 4 csk hd, black	
14	400480	Avstandsstykke	Spacer, black plastic	
15	402786	Skrue	Screw, M4 x 25 csk hd, black	
			Extra 19" rack mount.	
16	408928	Brakett	Bracket, rack mount, left	
17	403533	Brakett	Bracket, rack mount, right	
18	405214	Håndtak	Handle	
19	404819	Skrue	Screw, M4 x 12 csk hd, black	

www.hifiengine.com

Chassis assembly — top view

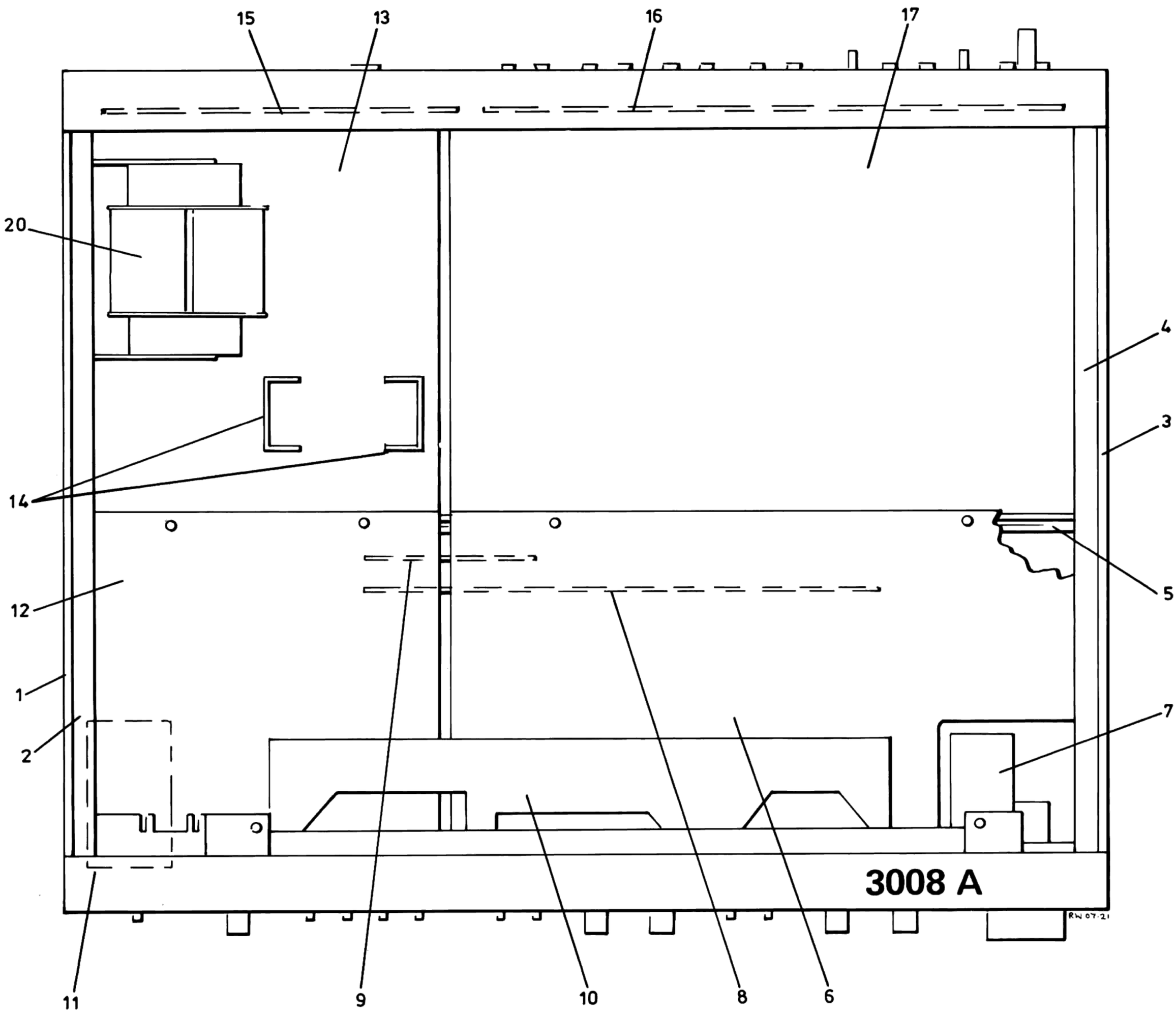

Index	SPECIFY THIS WHEN ORDERING Order No.	Beskrivelse	Description (notes)	Reference
		Sjassis-enhet	Chassis assembly, top view	
1	375969	Skinne	Plate, side, left	
2	378785	Skinne	Plate, chassis, side, left	
3	406816	Skinne	Plate, side, right	
4	375071	Skinne	Plate, chassis, side, right	
5	377650	Skinne	Rail, chassis	
6	600096	Kort	Board, selector	
7	600012	Kort	Board, volume control	
8	600113	Kort	Board, interconnection 2	
9	600118	Kort	Board, interconnection 3	
10	600111	Kort	Board, interconnection 1	
11	600109	Kort	Board, power switch	
12	600101	Kort	Board, headphone amplifier	
13	600104	Kort	Board, power supply, without transformer	
14	377011	Kjøleribbe	Heatsink	
15	600106	Kort	Board, power connection	
16	600091	Kort	Board, connector	
17	600093	Kort	Board, input RIAA	
20	371278	Transformator	Transformer	

www.hifiengine.com

Front panel

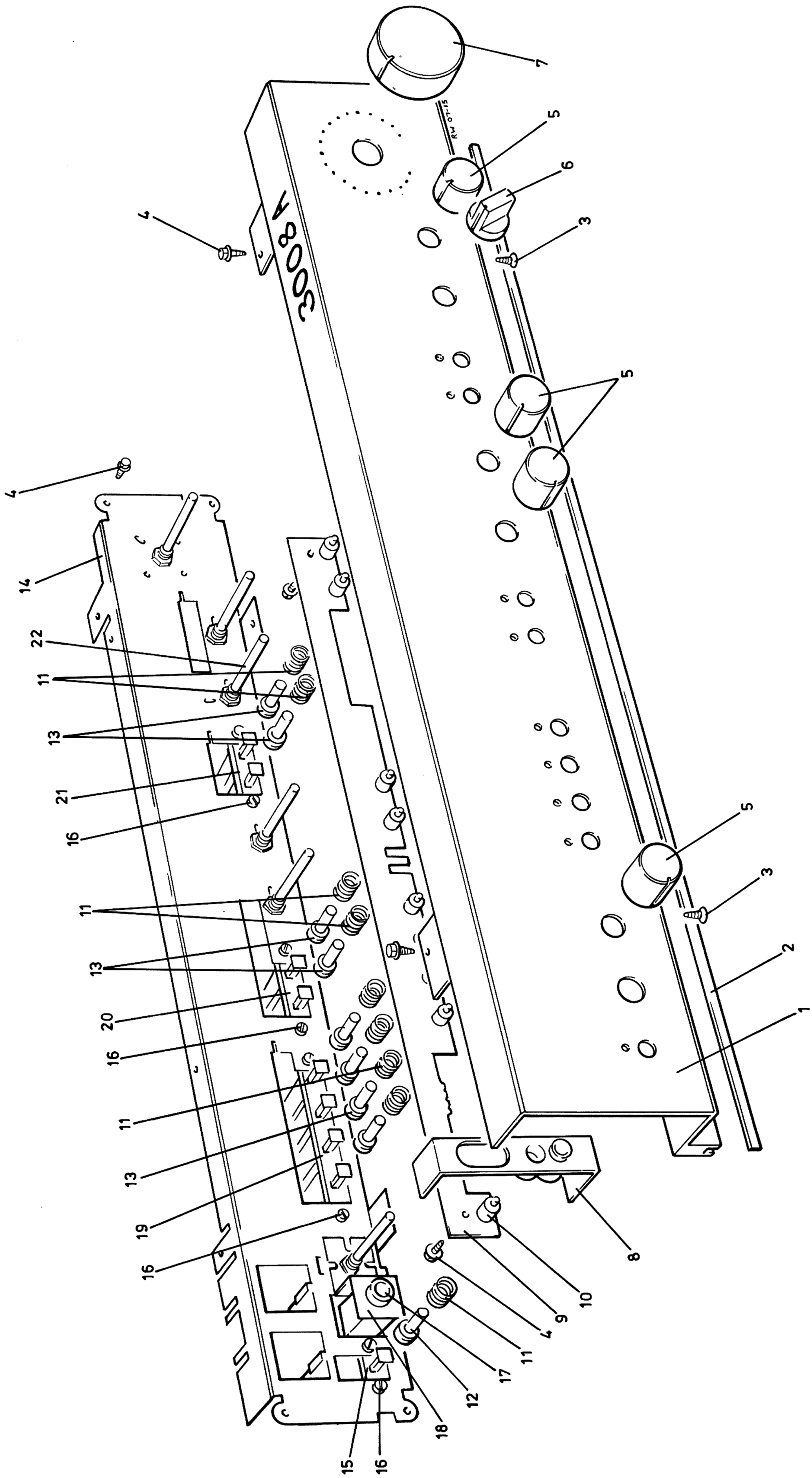
RW 07-15
4
7
5
6
3
5
4
14
22
11
13
21
16
11
13
20
16
11
13
19
16
15
16
18
12
17
11
4
9
10
8
5
3
2
1

Index	SPECIFY THIS WHEN ORDERING Order No.	Beskrivelse	Description (notes)	Reference
		Frontskinne	Front panel	
1	429670	Skinne	Panel, front	
2	379030B	List	Strip, rubber	
3	307990	Skrue	Screw, plate 3/8" No. 6 csk hd	
4	346854	Skrue	Screw, M3.5 x 6.3 hex hd, with collar	
5	379331	Knapp	Knob	VOLUME, BASS, TREBLE, BALANCE
6	375617	Knapp	Knob	PROGRAM SELECTOR
7	376673	Knapp	Knob	MAIN VOLUME
8	376048A	Hylse	Guide, push button knob	
9	600122	Kort	Board, LED, without diodes	
10	374425	Diode	Diode, SLP-132B, light emitting	
11	408023	Fjær	Spring	
12	376896A	Knapp	Knob, push button	POWER
13	378706A	Knapp	Knob, push button	TAPE, TAPE COPY, MONO, LOUDNESS, TONE DEFEAT, SUB SONIC FILTER
14	376235	Sjassi	Plate, chassis	
15	370992	Bryter	Switch	POWER
16	212237	Skrue	Screw, M3 x 6 ch hd	
17	372823	Kontakt	Socket, jack, 3 pole, 1/4"	HEADPHONES
18	376587	Holder	Bracket, headphone socket	
19	370367	Vender	Switch, push	TAPE, TAPE COPY
20	372048	Vender	Switch, push	SUB SONIC FILTER, TONE DEFEAT
21	373729	Vender	Switch, push	MONO, LOUDNESS
22	372471	Vender	Switch, push	PROGRAM SELECTOR

www.hifiengine.com

Back panel

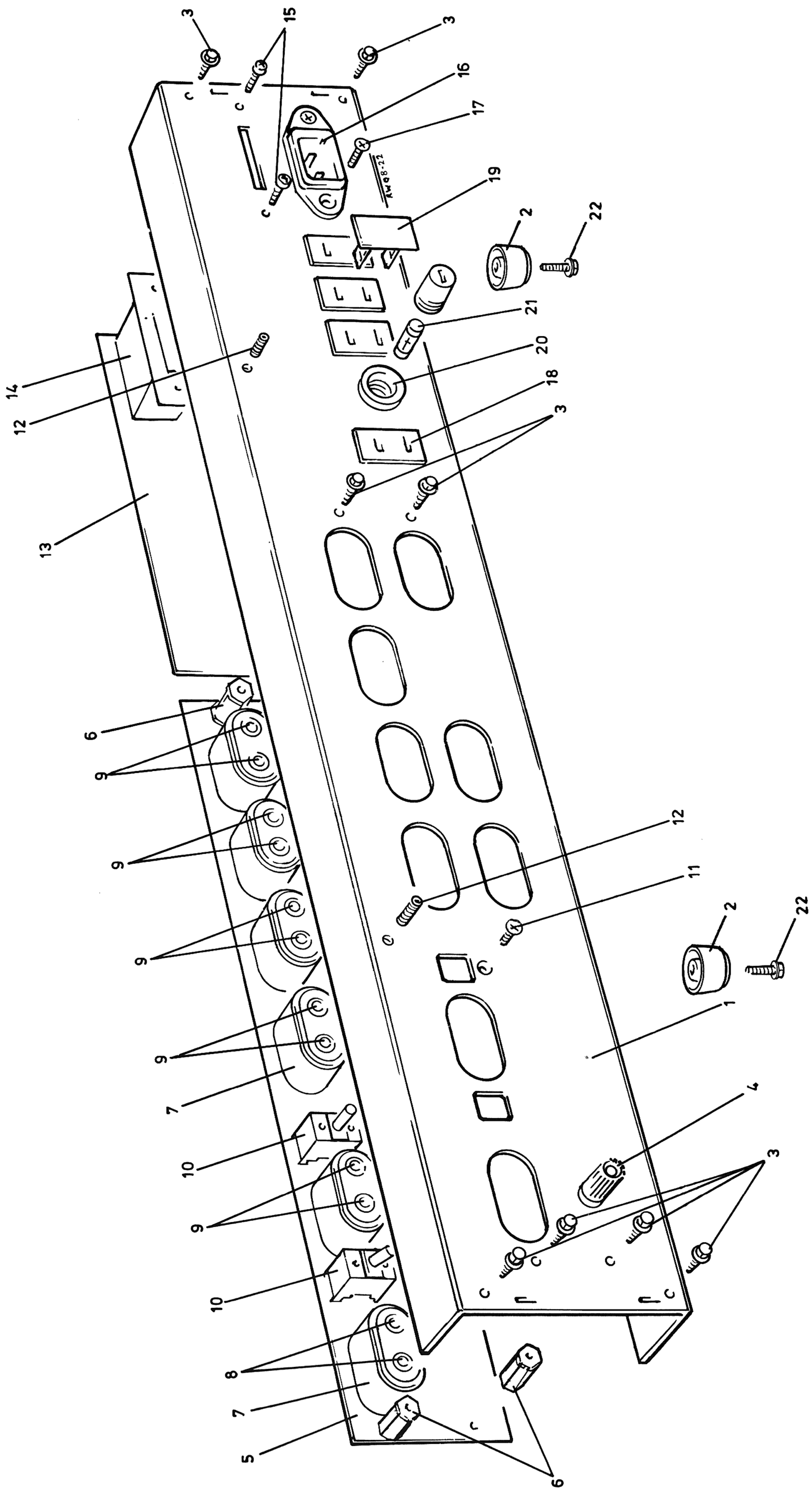

Index	SPECIFY THIS WHEN ORDERING Order No.	Beskrivelse	Description (notes)	Reference
		Bakskinne	Back panel	
1	429672	Skinne	Panel, back	
2	352421	Fot	Foot, plastic	
3	360735	Skrue	Screw, M3.5 x 7.9 hex hd, with collar	
4	379267	Kontakt	Terminal	
5	996901	Kort	Board, connector	
6	422484	Avstandsstykke	Spacer	
7	379001	Hylse	Surround, phono socket, double	
8	375143	Kontakt	Socket, phono, gold, 12T-7M 483	PHONO MC
9	371142	Kontakt	Socket, phono, silver, SQ-3061	TAPE PLAY, TAPE REC, AUX, TUNER, OUTPUT, PHONO MM
10	370790	Vender	Switch, toggle	OHM, PF
11	324850	Skrue	Screw, plate, 1/4" No. 4 pan hd, black	
12	400753	Skrue	Screw, set, M4 x 18	
13	996911	Kort	Board, power connection	
14	374152	Vender	Switch, voltage selector	
15	322817	Skrue	Screw, plate, 5/16" No. 4 pan hd, black	
16	374081	Kontakt	Socket, power, black, 6075-1	
17	262876	Skrue	Screw, plate, 1/4" No. 4 csk hd, black	
18	374504	Kontakt	Socket, power, 2 pole	
19	379016	Plugg	Cover, power socket	
20	363909	Holder	Holder, fuse, No. 19629/FEI 031.1431	
21	375560	Sikring	Fuse, 200 mA, 5 x 20 mm, slow	Europe
	274240	Sikring	Fuse, 400 mA, 5 x 20 mm, slow	U.S.A.
22	350402A	Skrue	Screw, M3.5 x 15 hex hd, with collar	

www.hifiengine.com

Index	SPECIFY THIS WHEN ORDERING Order No.	Beskrivelse	Description (notes)	Reference
R113	600033	Motstand	Resistor, 1.5 kohm	Metal film, 1W
R114	600033	Motstand	Resistor, 1.5 kohm	Metal film, 1W
R147	318693	Motstand	Resistor, 3.3 kohm	Metal film, 1%
R148	318693	Motstand	Resistor, 3.3 kohm	Metal film, 1%
R165	408296	Motstand	Resistor, 47 kohm	Metal film, 1%
R166	408296	Motstand	Resistor, 47 kohm	Metal film, 1%
R175	417134	Motstand	Resistor, 470 kohm	Metal film, 1%
R176	417134	Motstand	Resistor, 470 kohm	Metal film, 1%
R247	318693	Motstand	Resistor, 3.3 kohm	Metal film, 1%
R248	318693	Motstand	Resistor, 3.3 kohm	Metal film, 1%
R265	408296	Motstand	Resistor, 47 kohm	Metal film, 1%
R266	408296	Motstand	Resistor, 47 kohm	Metal film, 1%
R275	417134	Motstand	Resistor, 470 kohm	Metal film, 1%
R276	417134	Motstand	Resistor, 470 kohm	Metal film, 1%
R407	319081	Motstand	Resistor, 110 kohm	Metal film, 1%
R408	319081	Motstand	Resistor, 110 kohm	Metal film, 1%
R523	361451	Motstand	Resistor, 150 ohm	Metal oxide, 2W
R524	361451	Motstand	Resistor, 150 ohm	Metal oxide, 2W
R603	373025	Motstand	Resistor, 100 ohm	Wire wounded, 4W
R604	373025	Motstand	Resistor, 100 ohm	Wire wounded, 4W
	413106	Motstand	Resistor, 22 ohm	
	413113	Motstand	Resistor, 27 ohm	
	413139	Motstand	Resistor, 47 ohm	
	413170	Motstand	Resistor, 82 ohm	
	413176	Motstand	Resistor, 100 ohm	
	413190	Motstand	Resistor, 150 ohm	
	413200	Motstand	Resistor, 220 ohm	
	413219	Motstand	Resistor, 330 ohm	
	413228	Motstand	Resistor, 390 ohm	
	413238	Motstand	Resistor, 470 ohm	
	413245	Motstand	Resistor, 560 ohm	
	413253	Motstand	Resistor, 680 ohm	
	413259	Motstand	Resistor, 820 ohm	
	413270	Motstand	Resistor, 1 kohm	
	413281	Motstand	Resistor, 1.5 kohm	
	413290	Motstand	Resistor, 1.8 kohm	
	413302	Motstand	Resistor, 2.2 kohm	
	413320	Motstand	Resistor, 3.3 kohm	
	413327	Motstand	Resistor, 3.9 kohm	
	413335	Motstand	Resistor, 4.7 kohm	
	413340	Motstand	Resistor, 5.6 kohm	
	413352	Motstand	Resistor, 6.8 kohm	
	413358	Motstand	Resistor, 8.2 kohm	
	413365	Motstand	Resistor, 10 kohm	
	413384	Motstand	Resistor, 15 kohm	
	413407	Motstand	Resistor, 22 kohm	
	413412	Motstand	Resistor, 27 kohm	
	413418	Motstand	Resistor, 33 kohm	
	413425	Motstand	Resistor, 39 kohm	
	413432	Motstand	Resistor, 47 kohm	
	413458	Motstand	Resistor, 100 kohm	
	413467	Motstand	Resistor, 120 kohm	
	413487	Motstand	Resistor, 220 kohm	
	413559	Motstand	Resistor, 1 Mohm	

www.hifiengine.com

Index	SPECIFY THIS WHEN ORDERING Order No.	Beskrivelse	Description (notes)	Reference
C123	429692	Kondensator	Capacitor, 10 uF	Polypropylene 20%
C124	429692	Kondensator	Capacitor, 10 uF	Polypropylene 20%
C223	429692	Kondensator	Capacitor, 10 uF	Polypropylene 20%
C224	429692	Kondensator	Capacitor, 10 uF	Polypropylene 20%
C415	429692	Kondensator	Capacitor, 10 uF	Polypropylene 20%
C416	429692	Kondensator	Capacitor, 10 uF	Polypropylene 20%
C113	373613	Kondensator	Capacitor, 0.022 uF	Polypropylene 1%
C114	373613	Kondensator	Capacitor, 0.022 uF	Polypropylene 1%
C213	373613	Kondensator	Capacitor, 0.022 uF	Polypropylene 1%
C214	373613	Kondensator	Capacitor, 0.022 uF	Polypropylene 1%
C441	378297	Kondensator	Capacitor, 1000 uF, 25 V	Elko
C442	378297	Kondensator	Capacitor, 1000 uF, 25 V	Elko
C503	343233	Kondensator	Capacitor, 1000 uF, 6.3 V	Elko
C504	343233	Kondensator	Capacitor, 1000 uF, 6.3 V	Elko
C607	379159	Kondensator	Capacitor, 10 uF, 100 V	Elko
C608	379159	Kondensator	Capacitor, 10 uF, 100 V	Elko
C609	343427	Kondensator	Capacitor, 47 uF, 35 V	Elko
C611	370640	Kondensator	Capacitor, 1000 uF, 80 V	Elko
C616	370640	Kondensator	Capacitor, 1000 uF, 80 V	Elko
C619	411155	Kondensator	Capacitor, 0.01 uF, 250 V	Paper/Metal
	406852	Kondensator	Capacitor, 0.82 pF	Ceramic 1 2%
	424508	Kondensator	Capacitor, 2.5 pF	Polypropylene +/- 1 pF
	417854	Kondensator	Capacitor, 10 pF	Polypropylene 1%
	417859	Kondensator	Capacitor, 15 pF	Polypropylene 1%
	419705	Kondensator	Capacitor, 22 pF	Polypropylene 5%
	253917	Kondensator	Capacitor, 33 pF	Polystyrene 2.5%
	294722	Kondensator	Capacitor, 100 pF	Polystyrene 2.5%
	420746	Kondensator	Capacitor, 150 pF	Polypropylene 2.5%
	375014	Kondensator	Capacitor, 330 pF	Polypropylene 3.5%
	287078	Kondensator	Capacitor, 4700 pF, 50 V	Ceramic 2 10%
	371286	Kondensator	Capacitor, 6800 pF	Polypropylene 2.5%
	372967	Kondensator	Capacitor, 0.01 uF	Polypropylene 2.5%
	283041	Kondensator	Capacitor, 0.022 uF, 100 V	Foil 5%
	284370	Kondensator	Capacitor, 0.1 uF, 100 V	Foil 5%
	282377	Kondensator	Capacitor, 0.22 uF, 100 V	Foil 5%
	287991	Kondensator	Capacitor, 0.33 uF, 100 V	Polycarbonate 5%
	284097	Kondensator	Capacitor, 0.47 uF, 100 V	Foil 20%
	429690	Kondensator	Capacitor, 4.7 uF	Polypropylene 20%
	418682	Kondensator	Capacitor, 6.8 uF, 35 V	Elko
	343779	Kondensator	Capacitor, 10 uF, 50 V	Elko
	340065	Kondensator	Capacitor, 22 uF, 35 V	Elko
	341394	Kondensator	Capacitor, 47 uF, 25 V	Elko
	343075	Kondensator	Capacitor, 100 uF, 35 V	Elko

www.hifiengine.com

Index	SPECIFY THIS WHEN ORDERING Order No.	Beskrivelse	Description (notes)	Reference
	426156	Transistor	Transistor, 2 SD 786S	
	371336	Transistor	Transistor, BD 239B	
	373017	Transistor	Transistor, BD 240B	
	370007	Transistor	Transistor, BD 419	
	364353	Transistor	Transistor, BD 420	
	374505	Transistor	Transistor, BC 447B	
	370791	Transistor	Transistor, BC 448B	
	343047	Transistor	Transistor, BC 485B	
	344145	Transistor	Transistor, BC 546B	
	230291	Transistor	Transistor, BC 547B	
	373721	Transistor	Transistor, BC 550B	
	413722	Transistor	Transistor, BC 550C	
	340467	Transistor	Transistor, BC 556B	
	359260	Transistor	Transistor, BC 557B	
	424793	Transistor	Transistor, BC 560C	
	370359	Transistor	Transistor, BC 651DS	

Index	SPECIFY THIS WHEN ORDERING Order No.	Beskrivelse	Description (notes)	Reference
CR601	269169	Diode	Diode, BZX 83C 6V8	
CR602	269169	Diode	Diode, BZX 83C 6V8	
CR1001	374425	Diode	Diode, SLP-14	LED
CR1002	374425	Diode	Diode, SLP-14	LED
CR1003	374425	Diode	Diode, SLP-14	LED
CR1004	374425	Diode	Diode, SLP-14	LED
CR1005	374425	Diode	Diode, SLP-14	LED
CR1006	374425	Diode	Diode, SLP-14	LED
CR1007	374425	Diode	Diode, SLP-14	LED
CR1008	374425	Diode	Diode, SLP-14	LED
CR1009	374425	Diode	Diode, SLP-14	LED
	247007	Diode	Diode, 1N4148	

www.hifiengine.com

www.hifiengine.com

Tandberg Audio A.s
Fetveien 1, P.O. Box 49
N-2007 Kjeller, Norway

Bestilling av deler

Ved alle henvendelser, vennligst oppgi apparatets type og serienummer.
Ved bestilling av deler, oppgi bestillingsnummer og beskrivelse.

Bestillingsadresse

Kontakt nærmeste Tandberg-kontor eller:
Norsk Elektronikk Service As
Postboks 125
N – 2007 KJELLER – Norge

Telefon: (02) 71 68 20
Telex: 18007 kurer n

Ordering of spare parts

For all enquiries, please state the set's type and serial number.
When ordering, give the part's order number and description.

Ordering address

Contact your nearest Tandberg office, or:
Norsk Elektronikk Service As
P.O. Box 125
N – 2007 KJELLER – Norway

Telephone: (02) 71 68 20
Telex: 18007 kurer n

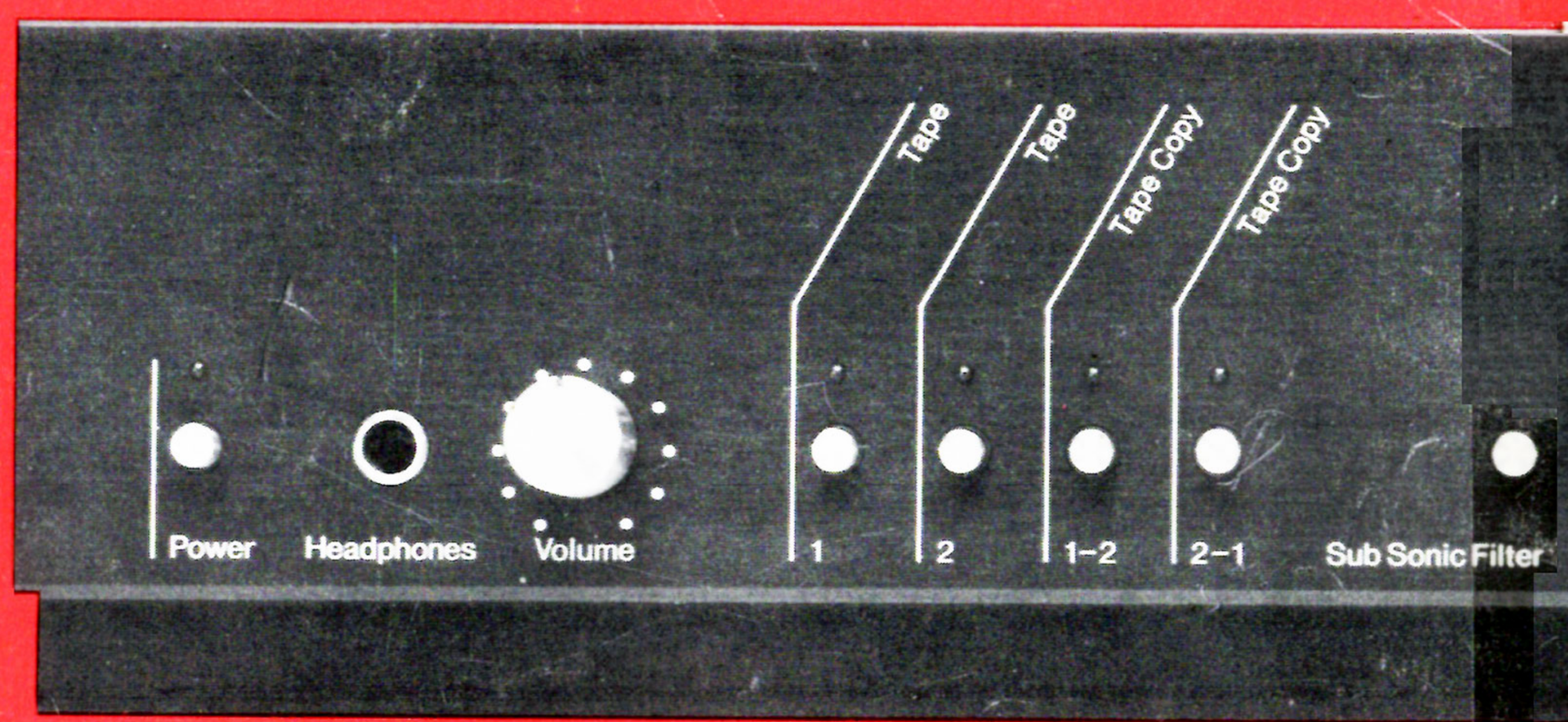

13 - 5 - 85 Part No. 600145 Printed in Norway by Reclamo A/S © Tandberg Audio A.s/Tekniske Forfattere As 1985