<ART-046-0>

SERVICE MANUAL

AM/FM STEREO RECEIVER

SX-737

KCU, GN, F

NOTE:

THE MODEL SX-737 COMES IN THREE VERSIONS DISTINGUISHED AS FOLLOWS:

Round label on rear panel	Voltage	Type
KCU	120V only	UL (U.S.A.) and CSA (Canada) approved.
GN	220V only	SEMCO (Sweden), NEMCO (Norway) and DEMCO (Denmark) approved.
F	110V, 120V, 130V, 220V and 240V	General export model

<74D02Y61D>

PIONEER®

CONTENTS

1. SPECIFICATIONS 3
2. FRONT PANEL FACILITIES 5
3. CONNECTION DIAGRAM 7
4. DISASSEMBLY 8
5. BLOCK DIAGRAM 9
6. PARTS AND P.C. BOARD LOCATION 11
7. DIAL CORD STRINGING 13
8. ALIGNMENT PROCEDURE 14
9. EXPLODED VIEW AND PARTS LIST 22
10. SCHEMATIC DIAGRAMS, P.C. BOARD PATTERNS AND PARTS LIST
    - 10.1 Circuit Connection Diagram and Miscellaneous Parts 27
    - 10.2 Tuner Assembly (AWE-043) 31
    - 10.3 Equalizer Amplifier Assembly (AWF-011) 37
    - 10.4 Microphone Amplifier Assembly (AWM-066) 40
    - 10.5 Control Amplifier Assembly (AWG-030) 42
    - 10.6 Power Amplifier Assembly (AWH-033) 46
    - 10.7 Protection Circuit Assembly (AWM-025) 51
    - 10.8 Power Supply Circuit Assembly (AWR-057) 54
    - 10.9 Power Supply Circuit Assembly (AWR-058) for GN model 57
    - 10.10 Switch & Volume Circuit Assembly (AWX-071) 60
    - 10.11 Speaker Switch Circuit Assembly (AWS-076) 63
    - 10.12 Push Switch Circuit Assembly (AWS-077) 64
    - 10.13 5P Connector Assembly (AWX-062) 64
11. PACKING METHOD AND PARTS NUMBER 65

1. SPECIFICATIONS

SEMICONDUCTORS

FET	1
ICs	3
Transistors	46
Diodes	22

AMPLIFIER SECTION

Continuous Power Output	
20Hz~20kHz (Both channels driven)	35W + 35W (8Ω : Rated Power)
	40W + 40W (4Ω)
1kHz (Both channels driven)	40W + 40W (8Ω)
	50W + 50W (4Ω)
Harmonic Distortion (20Hz~20kHz, Continuous Power Output)	Less than 0.5%
(1W + 1W Power Output)	Less than 0.05%
Intermodulation Distortion (Continuous Power Output)	Less than 0.5%
(1W + 1W Power Output)	Less than 0.05%
Power Bandwidth (IHF, Both channels driven)	5Hz~60kHz (T.H.D. 0.5%)
Output Speaker	A, B, A + B, (4Ω~16Ω)
Headphones	4Ω~16Ω
Damping Factor (1kHz, 8Ω)	More than 40
Residual Hum & Noise (8Ω, Pre & Power amplifier)	Less than 0.5mV
Input Sensitivity/Impedance	
PHONO	2.5mV/50kΩ
PHONO Overload Level (rms/p-p)	170mV/480mV
MIC	2.5mV/50kΩ
AUX	150mV/50kΩ
TAPE PB 1, 2	150mV/50kΩ
TAPE PB 2 (DIN connector)	150mV/50kΩ
Output Level/Impedance	
TAPE REC 1, 2	150mV
TAPE REC 2 (DIN connector)	30mV/80kΩ
Frequency Response	
PHONO (RIAA equalization)	30Hz~15kHz ±0.3dB
AUX, TAPE PB	15Hz~40kHz $^{+0.5}_{-1}$dB
Tone Control	
BASS	±10dB (100Hz)
TREBLE	±10dB (10kHz)
Filter	
LOW	−9dB (50Hz) 6dB/oct
HIGH	−9dB (10kHz) 6dB/oct
Loudness Contour (Volume control set at −40dB position)	+8dB (100Hz), +3dB (10kHz)
Hum & Noise (IHF, short-circuited, A Network)	
PHONO	More than 70dB
MIC	More than 65dB
AUX, TAPE PB	More than 95dB

FM SECTION

Usable Sensitivity (IHF)	1.9μV
Capture Ratio (IHF)	1.0dB
Selectivity (IHF)	60dB
Signal-to-Noise Ratio	70dB
Image Rejection (98MHz)	80dB
IF Rejection (98MHz)	100dB
Spurious Rejection	100dB
AM Suppression	55dB
Harmonic Distortion:	
MONO	Less than 0.2%
STEREO	Less than 0.4%
Frequency Response	20Hz~15kHz $^{+0.2}_{-2.0}$dB
	50Hz~10kHz $^{+0.2}_{-0.5}$dB
Stereo Separation:	
1kHz	More than 40dB
50Hz~10kHz	More than 30dB
Sub Carrier Suppression	40dB
Antenna Input	300Ω Balanced
	75Ω Unbalanced
Muting	ON–OFF

AM SECTION

Sensitivity	
(IHF, Ferrite antenna)	300μV/m
(IHF, Ext. antenna)	15μV
Selectivity	35dB
Signal-to-Noise Ratio	50dB
Image Rejection	40dB
IF Rejection	70dB

MISCELLANEOUS

Power Requirements	AC 120V 60Hz, 220V 50/60Hz or 110, 120, 130, 220 and 240V (switchable) 50/60Hz
Power Consumption	190W (UL approved model only)
	280W (Others model)
Dimensions	500(W) x 158(H) x 410(D)mm
	19-11/16 x 6-1/4 x 16-1/8 in.
Weight:	
Without Package	13.2kg (29 lb)
With Package	15.7kg (34 lb 9 oz)

FURNISHED PARTS

FM T-type Antenna	1	
Operating Instructions	1	
Fuse 3A	1	(5 line voltage model only)
Fuse 1.5A	1	

NOTE:
Specifications and the design subject to possible modification without notice due to improvements.

2. FRONT PANEL FACILITIES

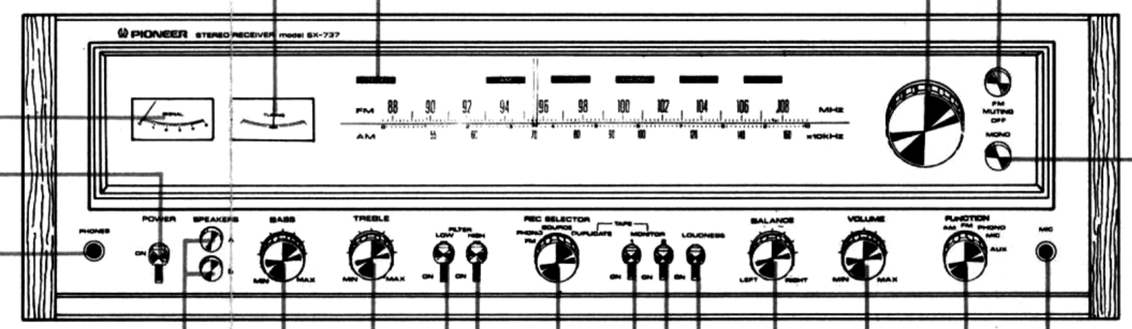

FM TUNING METER
When tuning in an FM station, first employ the SIGNAL meter, then perform fine tuning adjustment in order to center the needle of this meter.

SIGNAL METER
Tune in both AM and FM stations for maximum deflection of the meter indicator to the right.

POWER SWITCH
AC power is turned on by setting this switch to the ON (up) position. About 3 to 6 seconds will elapse after the power is turned on before sound is obtained. This is due to the operation of a protection circuit which prevents unpleasant sound from emanating from the speakers.

PHONES JACK
For plugging in stereo headphones. A wide variety of high quality headphones are available from Pioneer.

SPEAKER BUTTONS
Buttons for selecting A or B speaker system connected to A or B output terminals.

A: Speaker system A operates
B: Speaker system B operates

NOTES:
1. *When employing headphones, speakers can be turned off by setting the SPEAKERS buttons to the OFF (undepressed) position.*
2. *Two pairs (A, B) of speaker systems can be used at the same time with A and B switches pushed.*

BASS & TREBLE CONTROLS
Adjust bass and treble. Flat response is obtained at center of rotation. Turning the controls clockwise or counterclockwise from center will boost or diminish the tone as desired.

FILTER SWITCHES
LOW: Set to ON when low pitched noise, such as rumble of phono motor, is objectionable. At other times, set this switch of OFF.

HIGH: Set to ON when high pitched noise, such as record scratch noise, is objectionable. At other times, set this switch to OFF.

TUNING CONTROL
Turn this knob to tune in desired broadcast station.

FM STEREO INDICATOR
Lights when stereophonic FM broadcast is being received.

REC SELECTOR SWITCH
Permits one program source to be heard through the speakers while another is being recorded on tape deck connected to the TAPE 1 jacks.

FM: To record FM broadcasts. In this case, AM broadcasts cannot be heard.
PHONO: For recording from records.
SOURCE: When recording from same source selected by the FUNCTION switch.
DUPLICATE: For duplicating or editing recorded tape by employing two tape decks connected to the TAPE 1 & 2 jacks.

TAPE MONITOR (1 & 2) SWITCHES
These switches permit the recorded sound to be monitored when recording with a tape deck. They also allow listening to tapes (playback).

1..... Employ this switch when tape deck connected to TAPE 1 (REC & PB) jacks is being used for playback, or for monitoring a recording in progress.
2..... Employ this switch when tape deck connected to TAPE 2 (REC & PB or REC/PB DIN connector) jacks is being used for playback, or for monitoring a recording in progress.

LOUDNESS SWITCH
Compensates for human ear response to low sound volumes. Set to ON to enhance low and high frequencies when listening at low volume levels.

FM MUTING BUTTON
Set to ON (undepressed position) when listening to FM broadcasts. This will suppress inter-station noise and weak interfering stations when tuning in a desired station. If the desired station is weak, however, set this button to the OFF (depressed) position.

MODE BUTTON
Selects stereo or mono sound.

STEREO: Leave it undepressed.
MONO: Depress it for monophonic sound into which the left and right channel signals blend.

MIC INPUT JACK
Accepts the plug of the microphone.

FUNCTION SWITCH
Selects desired program source.

AM: AM reception.
FM: FM reception with automatic switching for stereo or mono programs. The STEREO indicator lights when the broadcast is in stereo.
PHONO: When playing turntable connected to the PHONO jacks.
MIC: When using microphone.
AUX: To play component connected to the AUX input jacks.

VOLUME CONTROL
Adjusts sound volume of both speakers and headphones. Clockwise rotation increases volume.

BALANCE CONTROL
Adjusts balance between left and right speakers. When turned clockwise, left channel volume decreases while right channel volume increases. Turning the control counterclockwise has the opposite effect.

3. CONNECTION DIAGRAM

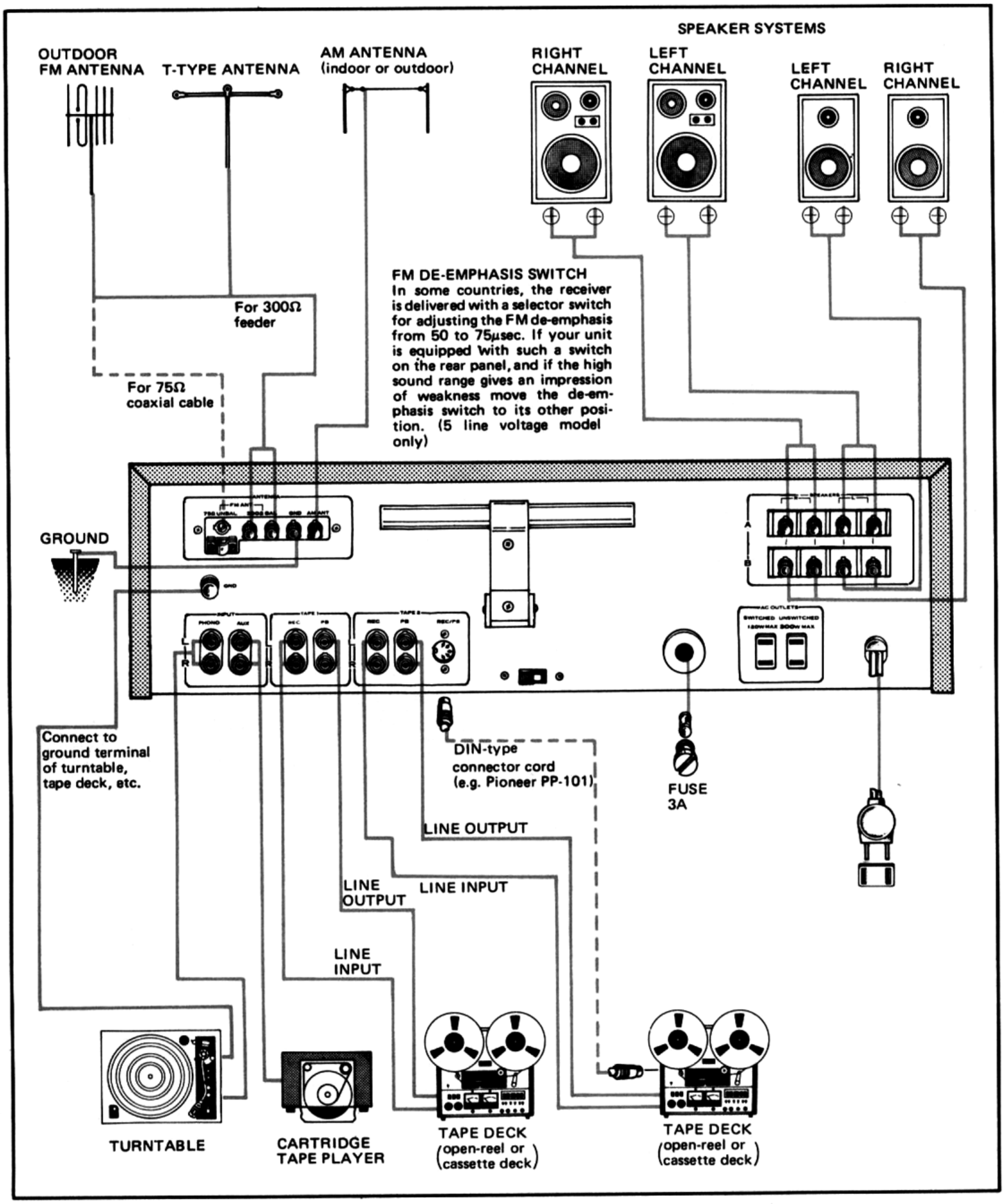

4. DISASSEMBLY

1. To remove the wooden cabinet, remove 2 screws each fastening either side and lift the cabinet while sliding it backwards.
2. Pull off all the knobs.
3. To remove the front panel, remove 2 screws fastening its top and nuts and washers holding each of BASS and FUNCTION control shafts.
4. To remove the bottom plate, remove a total of 10 screws.

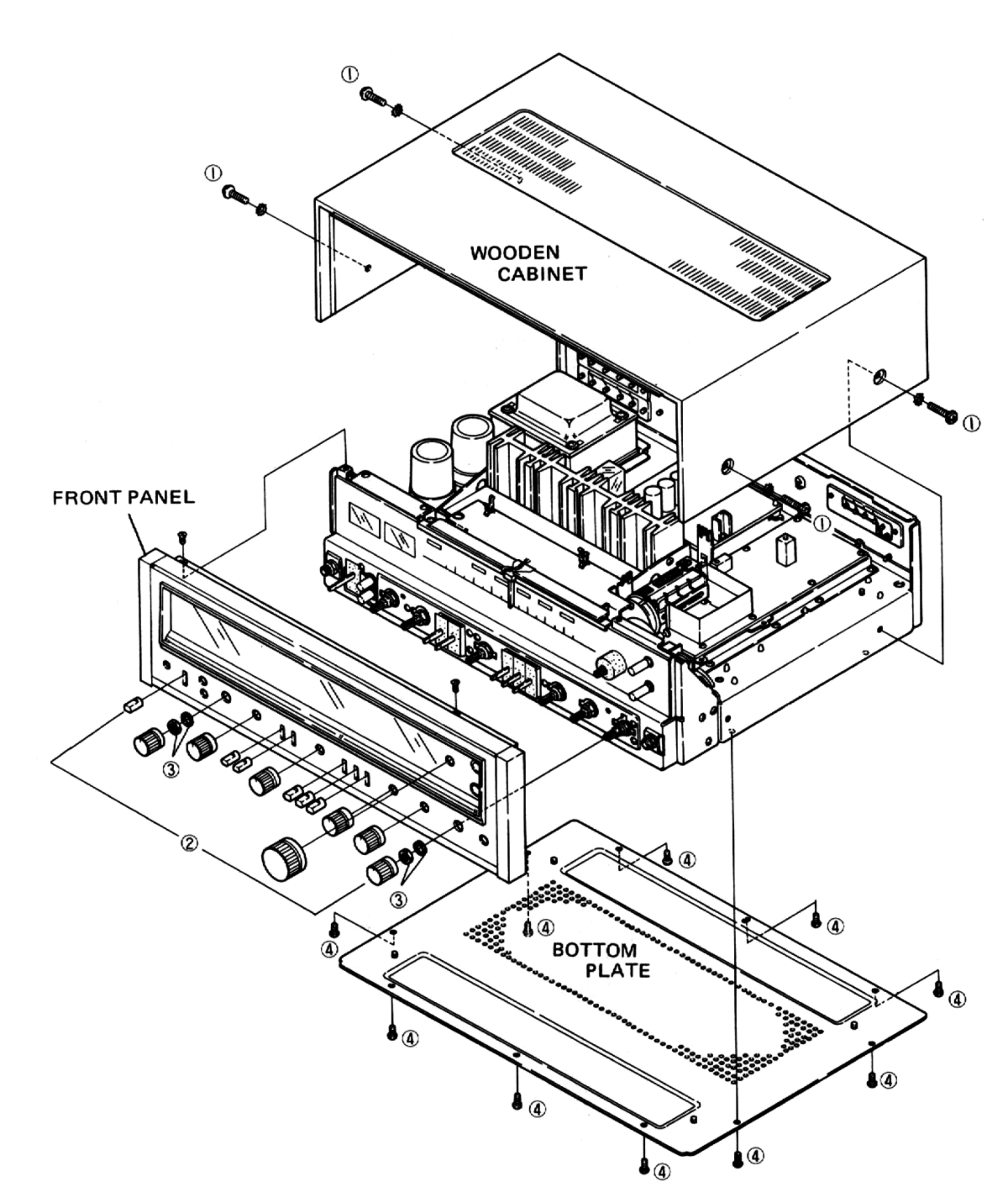

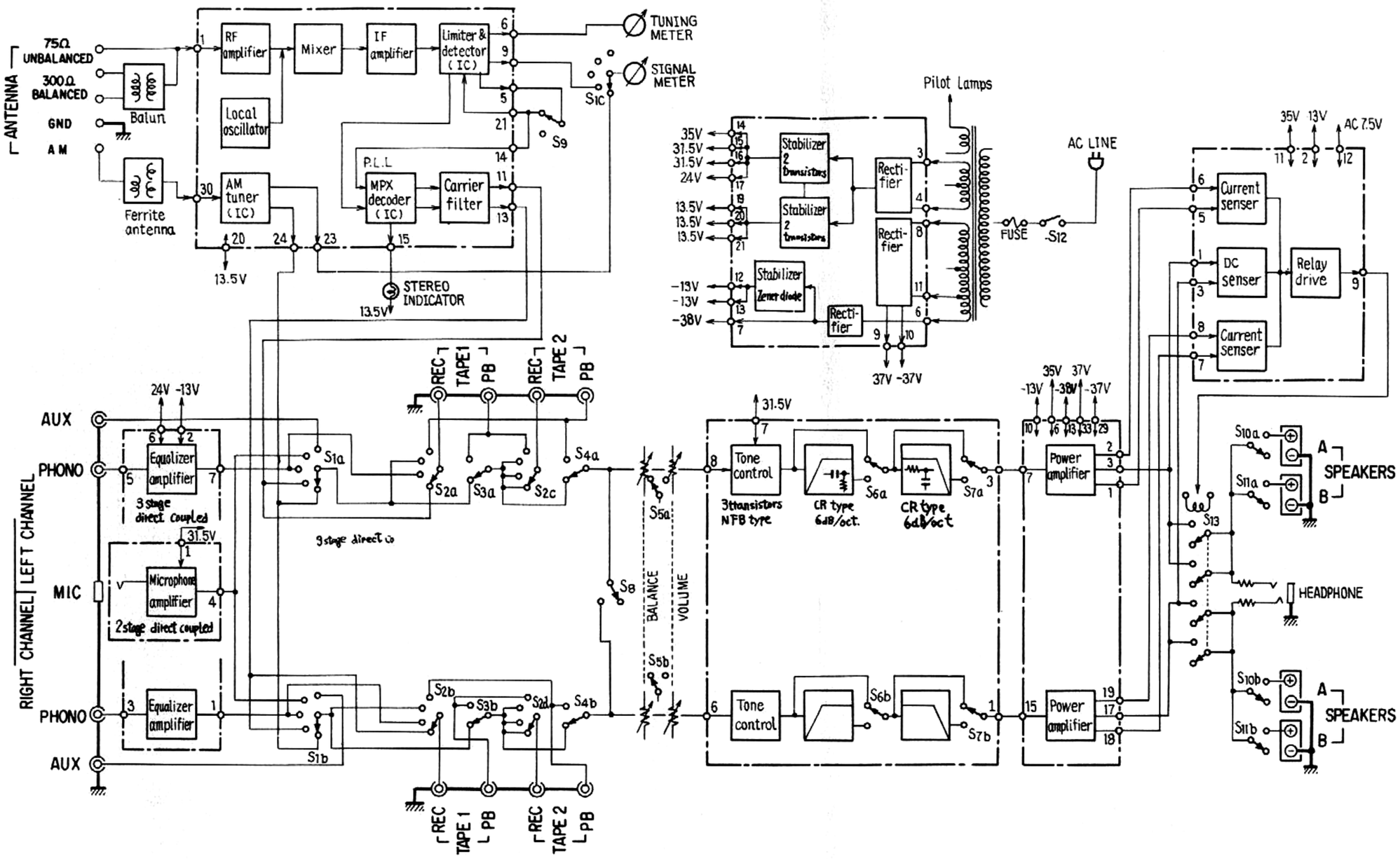

SWITCHES

- S_1 FUNCTION
  - 1 AM
  - 2 FM
  - 3 PHONO
  - 4 MIC
  - 5 AUX
- S_2 REC SELECTOR
  - 1 FM
  - 2 PHONO
  - 3 SOURCE
  - 4 DUPLICATE
- S_3 TAPE MONITOR 1
- S_4 TAPE MONITOR 2
- S_5 LOUDNESS
- S_6 LOW FILTER
- S_7 HIGH FILTER
- S_8 MODE
- S_9 FM MUTING
- S_{10} SPEAKER A
- S_{11} SPEAKER B
- S_{12} POWER
- S_{13} RELAY

LEVEL DIAGRAM

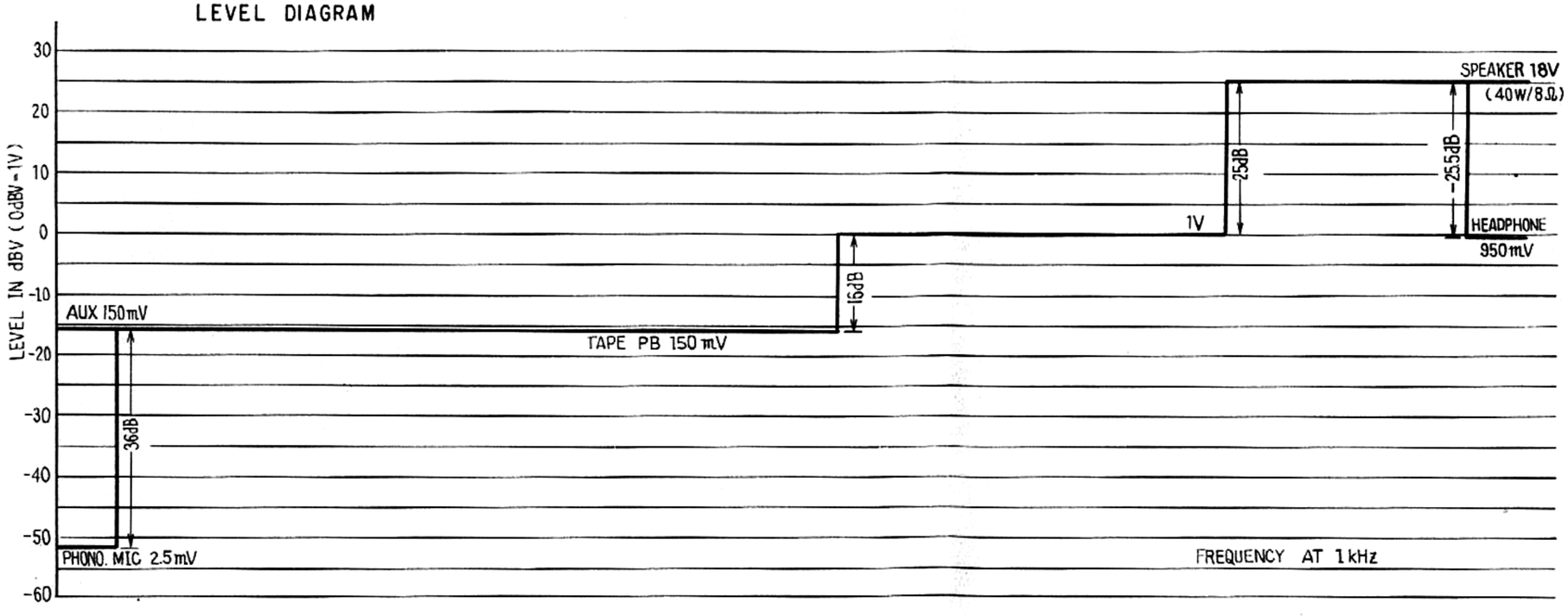

6. PARTS AND P.C. BOARD LOCATION

Top View

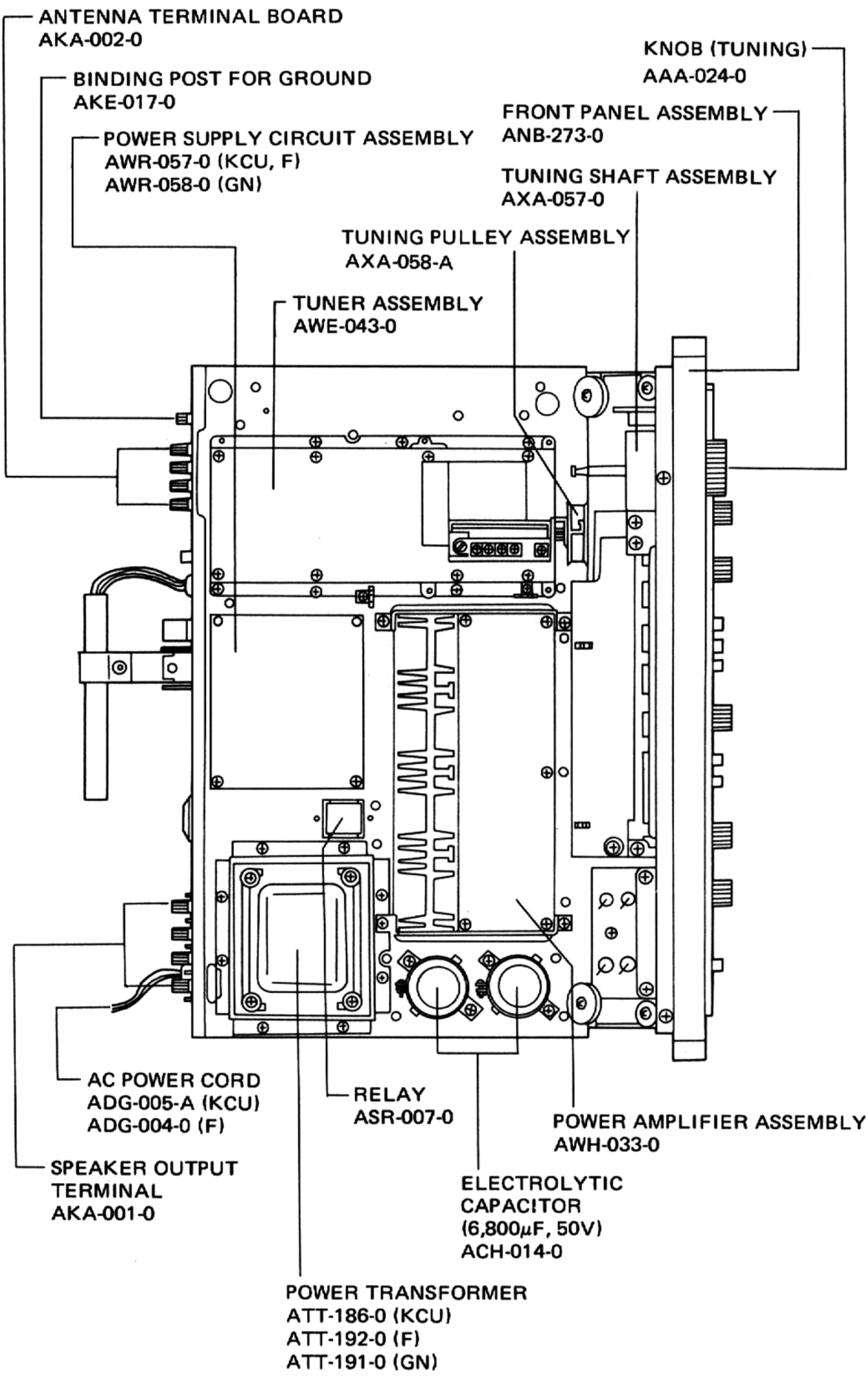

Bottom View

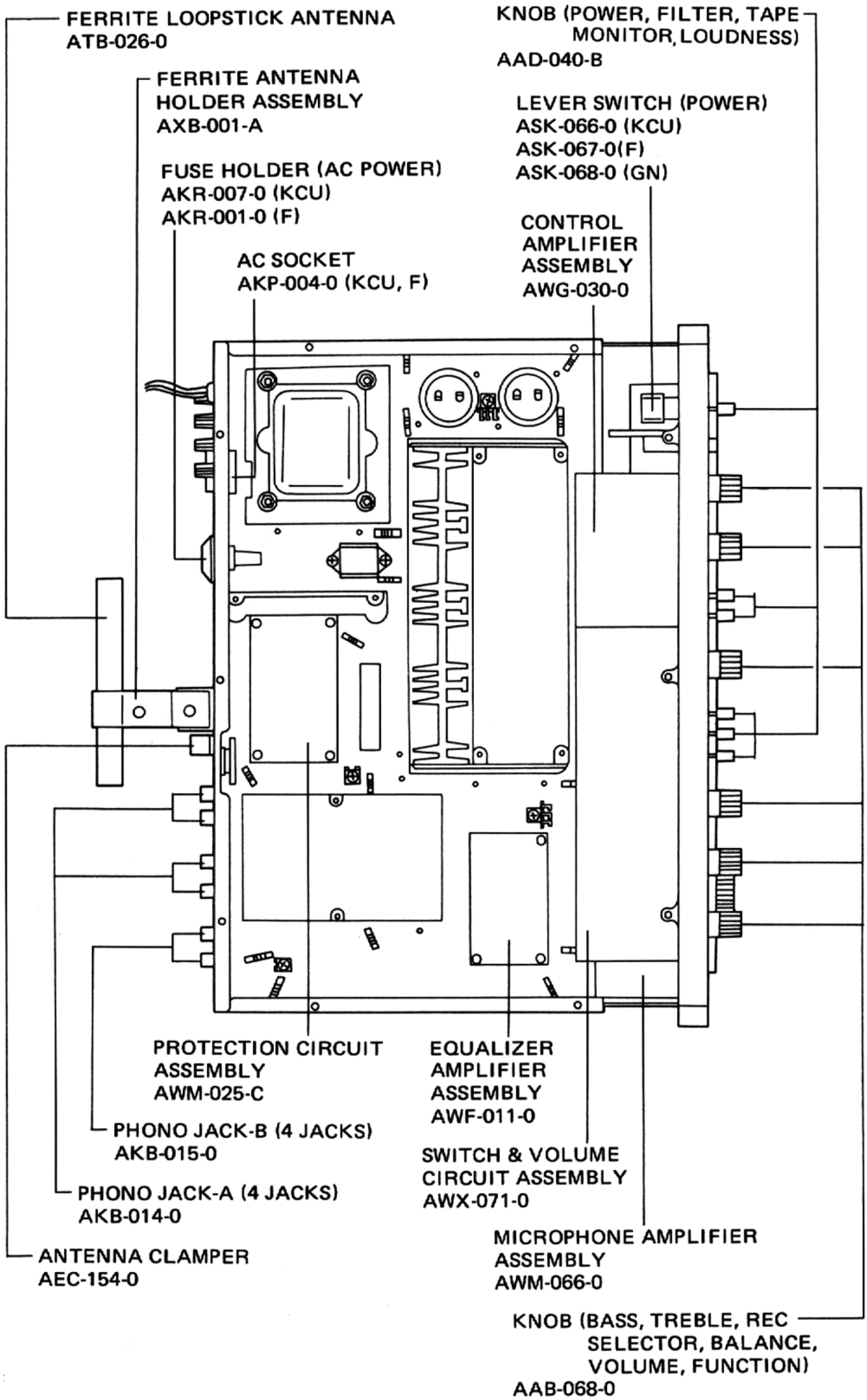
FERRITE LOOPSTICK ANTENNA
ATB-026-0
FERRITE ANTENNA
HOLDER ASSEMBLY
AXB-001-A
FUSE HOLDER (AC POWER)
AKR-007-0 (KCU)
AKR-001-0 (F)
AC SOCKET
AKP-004-0 (KCU, F)
KNOB (POWER, FILTER, TAPE
MONITOR, LOUDNESS)
AAD-040-B
LEVER SWITCH (POWER)
ASK-066-0 (KCU)
ASK-067-0(F)
ASK-068-0 (GN)
CONTROL
AMPLIFIER
ASSEMBLY
AWG-030-0
PROTECTION CIRCUIT
ASSEMBLY
AWM-025-C
EQUALIZER
AMPLIFIER
ASSEMBLY
AWF-011-0
PHONO JACK-B (4 JACKS)
AKB-015-0
SWITCH & VOLUME
CIRCUIT ASSEMBLY
AWX-071-0
PHONO JACK-A (4 JACKS)
AKB-014-0
MICROPHONE AMPLIFIER
ASSEMBLY
AWM-066-0
ANTENNA CLAMPER
AEC-154-0
KNOB (BASS, TREBLE, REC
SELECTOR, BALANCE,
VOLUME, FUNCTION)
AAB-068-0

7. DIAL CORD STRINGING

1. Turn the tuning knob until the plates of the tuning capacitor are as far out as possible.
2. Fasten one end of the cord to the boss on the tuning pulley and pass it through the slit.
3. Run the cord round pulleys A, B, C and D in this order and wind 3 turns round the tuning shaft.
4. Wind the cord 2 turns round the tuning pulley and tie the end to the spring while tensioning the spring slightly. Trim off excess cord.
5. Turn the tuning knob fully clockwise and fix the dial pointer to the cord at the point where it indicates "10" on the dial scale.

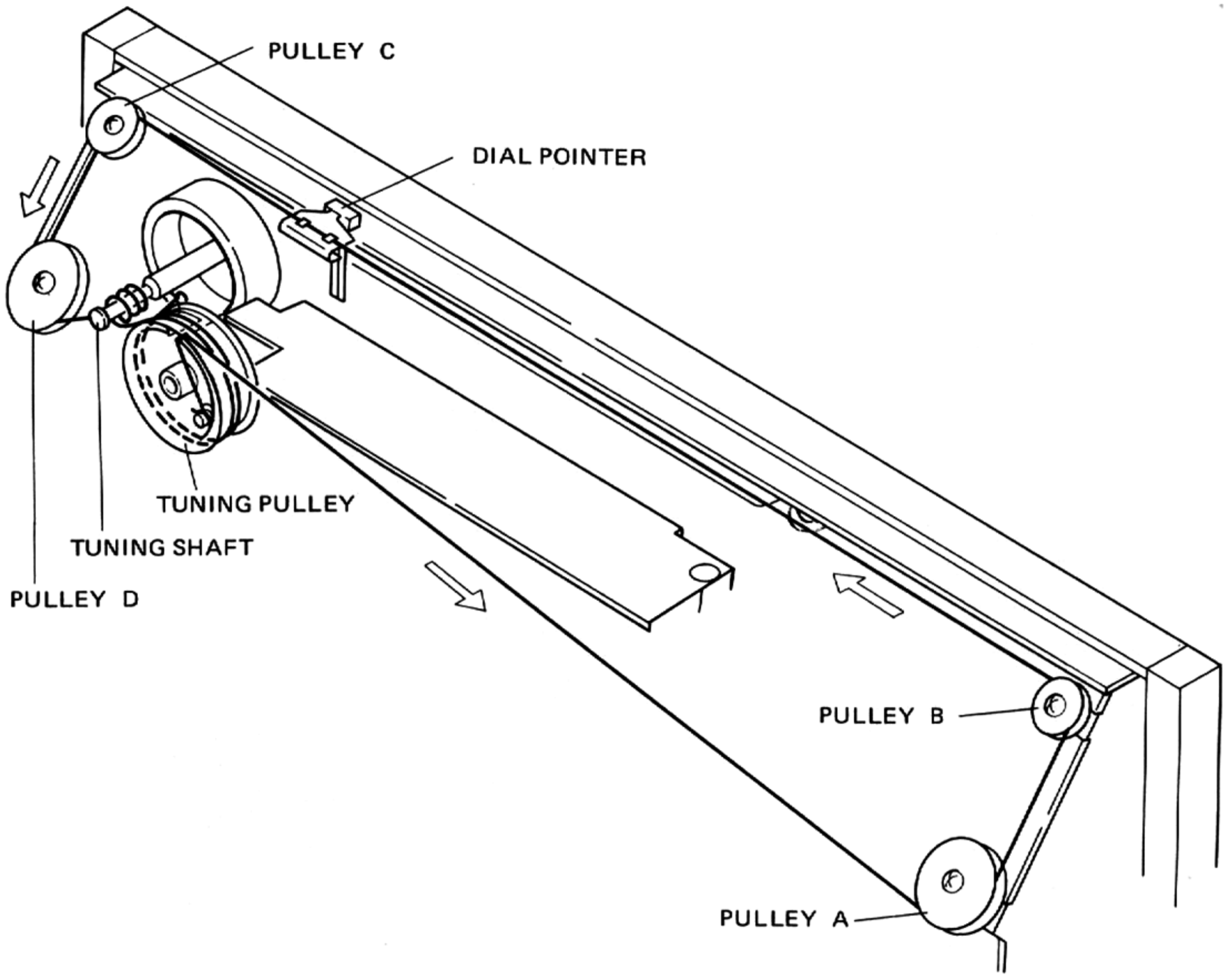

8. ALIGNMENT PROCEDURE

FM Section

1. Switch positions on the SX-737:
   FUNCTION . . . . . FM
   FM MUTING . . . . . OFF (pressed in)
   POWER . . . . . ON
   REC SELECTOR . . . . . SOURCE
2. Connection of instruments:
   FM Signal Generator (FM SG) . . . Connect to FM ANTENNA terminals through 300Ω dummy antenna.
   AC Voltmeter, Distortion meter, Oscilloscope . . . . . Connect in parallel to TAPE REC jack.
3. Set FM SG to 100% modulation (±75kHz deviation) at 400Hz and 100dB output.
4. Tune FM SG and SX-737 to dial readings of 87.4MHz(dial pointer set to left end) and adjust T4 so that signal meter makes maximum deflection.
5. Adjust T6 (lower core) so that tuning meter points to the center.
6. Set FM SG output to 8 ~ 10dB and adjust T1, T2 and T3 to maximinze audio frequency output level.
7. Tune FM SG and SX-737 to dial readings of 106MHz and adjust TC4 so that signal meter makes maximum deflection when FM SG output is 100dB.
8. Set FM SG output to 8~10dB and adjust TC1, TC2 and TC3 to maximize audio frequency output level.
9. Tune FM SG and SX-737 to dial readings of 90MHz and adjust T5 so that signal meter makes maximum deflection when FM SG output is 100dB.
10. Set FM SG output to 8~10dB and adjust T1, T2 and T3 to maximize audio frequency output level.

- Repeat steps 7 through 10 so that output is maximized when the dial indicates the given frequencies.

11. Tune FM SG and SX-737 to dial readings of 90MHz and adjust T5 to maximize audio frequency output level when FM SG output is 8~10dB.
12. Detune SX-737 so that only noise is received.
13. Adjust T6 (lower core) so that tuning meter points to the center.
14. Tune FM SG and SX-737 to dial readings of 98MHz. Fine tune SX-737, observing tuning meter.
15. Set FM SG output to 60dB and adjust T6 (upper core) to minimize distortion.
16. Set FM SG output to 100dB and adjust VR1 so that signal meter readings 5.

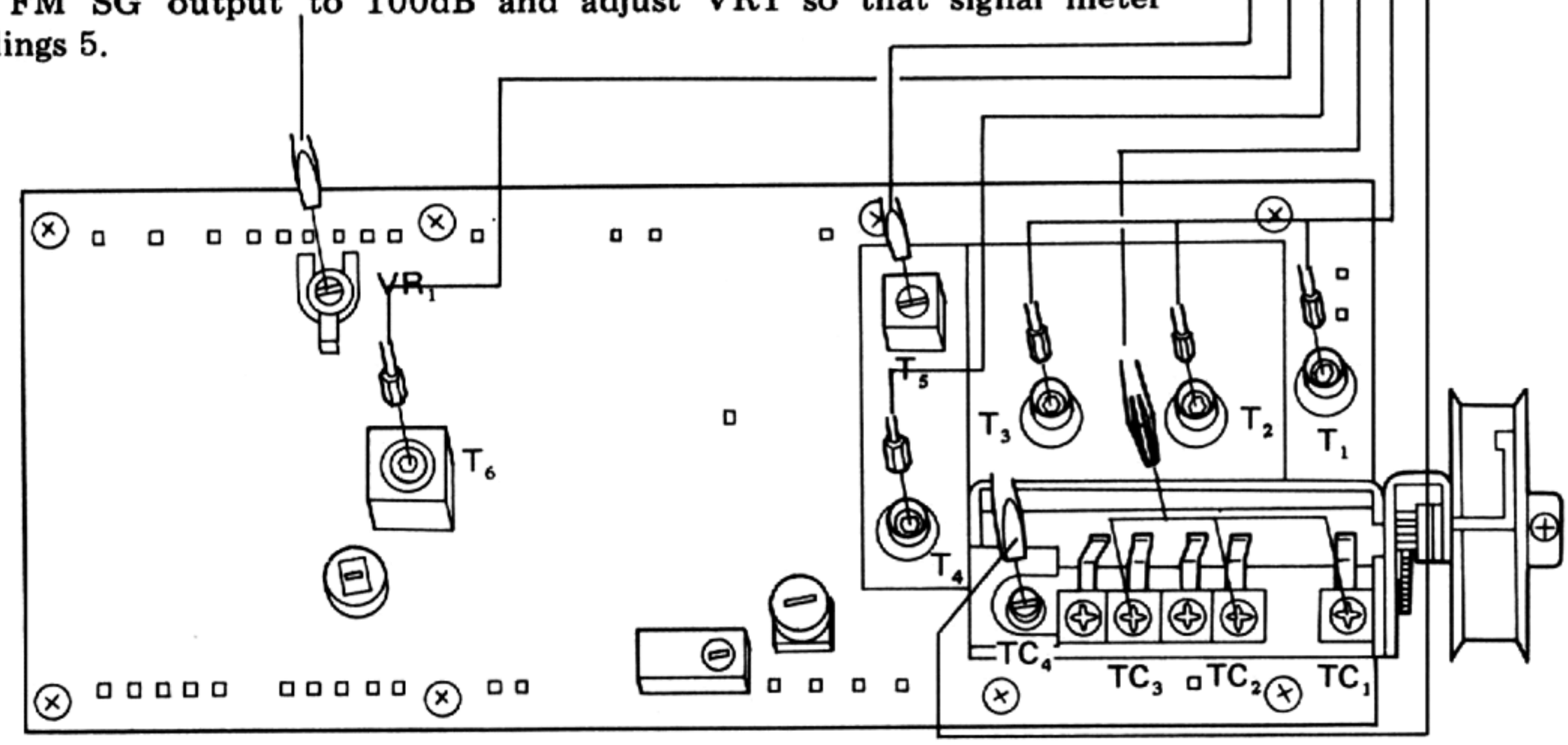

TUNER ASSEMBLY (AWE-043)

FM MPX Section

- The SX-737 incorporates a PLL demodulator circuit. This adjustment should only be made when MPX IC has been replaced.
- This adjustment should be made after completion of FM section adjustment.

1. Switch positions on the SX-737:
   FUNCTION . . . . . FM
   FM MUTING . . . . . OFF (pressed in)
   POWER . . . . . ON
   REC SELECTOR . . . . . SOURCE
2. Connection of instruments:
   FM Signal Generator (FM SG) . . . . Connect to FM ANTENNA terminals through 300Ω dummy antenna.
   MPX Signal Generator (MPX SG) . . Connect to FM SG's external modulator terminals.
   Oscilloscope . . . . . Connect horizontal input to MPX SG's PILOT OUT terminals and vertical input to No. 18 terminal of tuner assembly.
   Distortion meter . . . . . Connect to TAPE REC jack.
3. Tune FM SG and SX-737 to dial readings of 98MHz.
4. Set MPX SG to ±67.5kHz deviation at 1kHz for left and right channels and FM SG output to 60dB.
5. Produce a Lissajous pattern on oscilloscope and adjust VR2 to make the pattern still.
6. Set MPX SG to ±67.5kHz deviation at 1kHz for left and right channels and to ±7.5kHz deviation for 19kHz pilot signal. Set FM SG output to 60dB.
7. Adjust T5 to minimize distortion of audio frequencies for left or right channel.

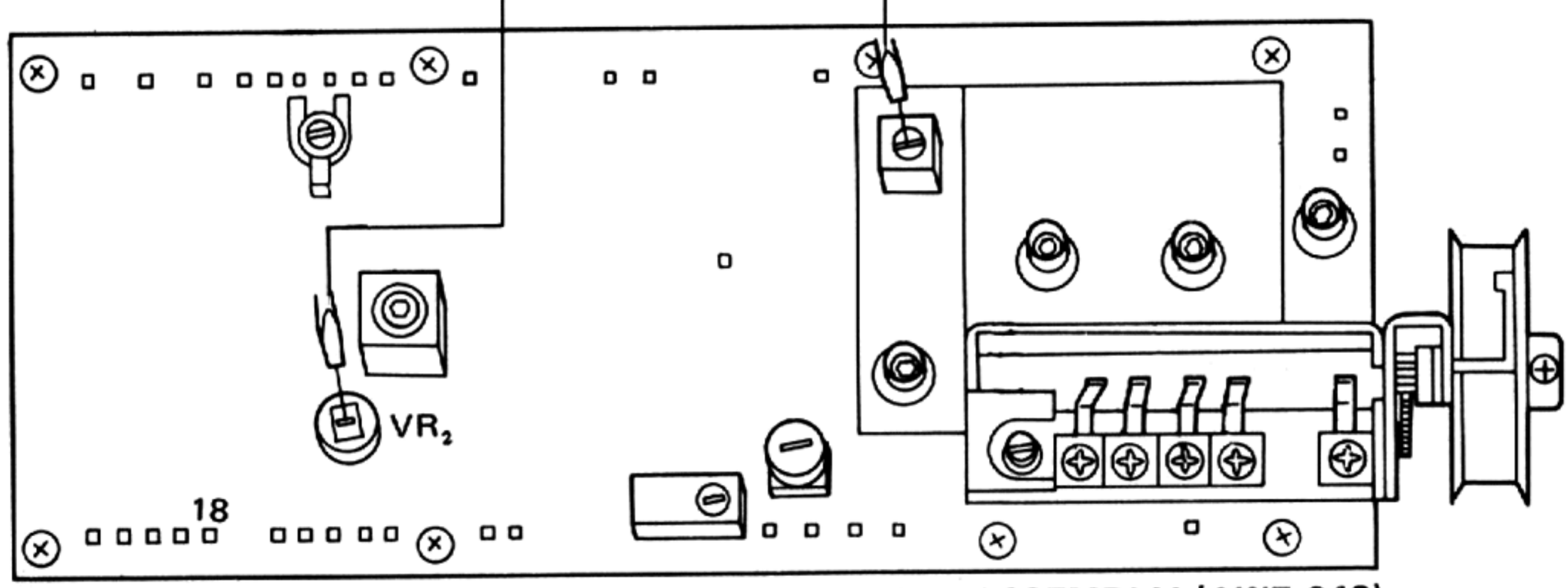

TUNER ASSEMBLY (AWE-043)

AM Section

1. Switch positions on the SX-737:
   FUNCTION . . . . . AM
   POWER . . . . . ON
   REC SELECTOR . . . . . SOURCE
2. Connection of instruments:
   AM Signal Generator (AM SG) . . . . Connect to AM ANTENNA terminals in series with dummy antenna (1kΩ resistor).
3. Set AM SG to 30% modulation at 400Hz and 30dB output.
4. Tune AM SG and SX-737 to dial readings of 600kHz and adjust T7 to maximize audio frequency output level. (Adjust core of ferrite loopstick antenna at the same time.)
5. Tune AM SG and SX-737 to dial readings of 1,400kHz and adjust TC5 and TC6 to maximize audio frequency output level.

- Repeat steps 4 and 5 so that output is maximized when the dial indicates these frequencies.

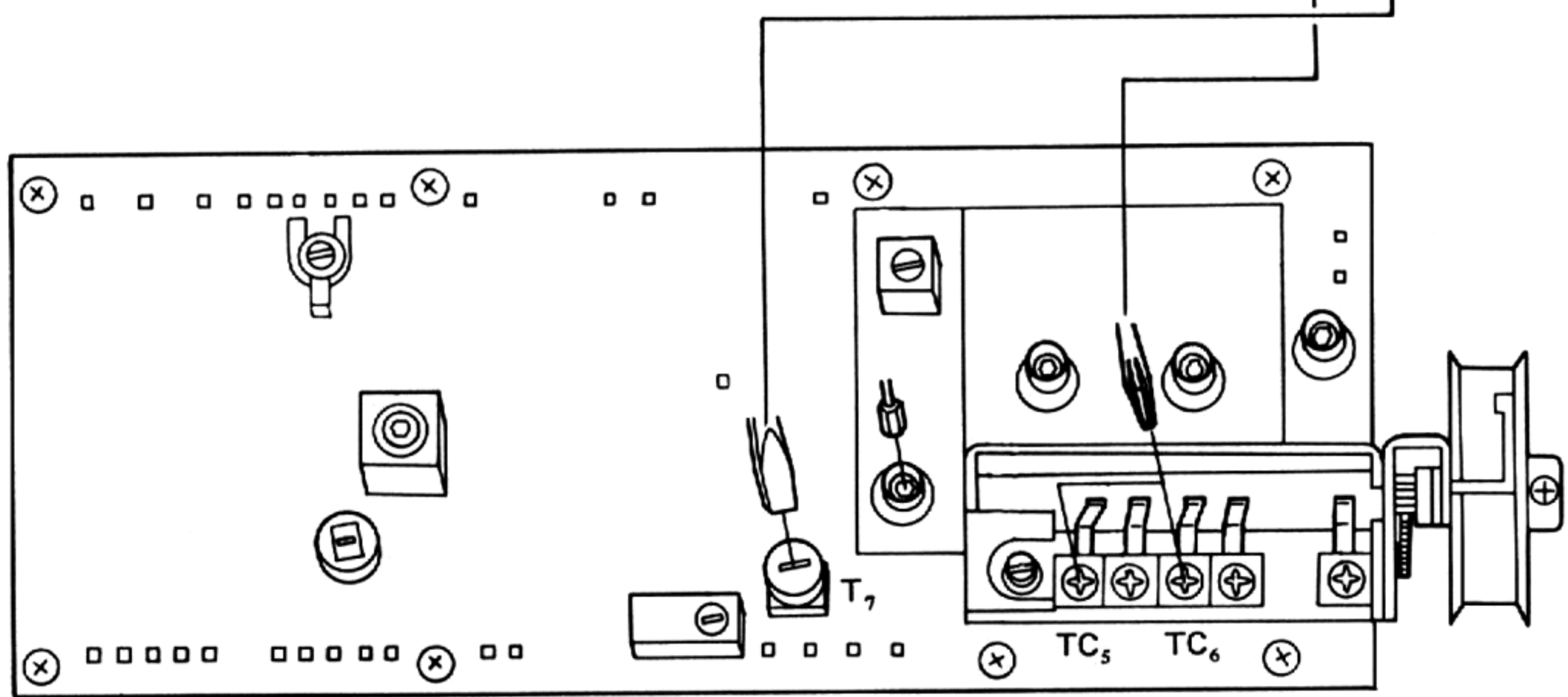

TUNER ASSEMBLY (AWE-043)

Power Amplifier (DC neutral voltage and idle current)

- Do this adjustment when any of the transistors in the power amplifier has been replaced.
- Terminal and VR numbers given first are for the left channel and those in brackets are for the right channel.

1. Switch positions on the SX-737:
   FUNCTION . . . . . AUX
   POWER . . . . . ON
   SPEAKER . . . . . A (A button pressed in)
2. Connect 8Ω dummy load to SPEAKER A terminals. (Keep AUX jacks free, and VOLUME control set at minimum.)
3. Connect DC voltmeter to No. 3 (17) terminal of power amplifier assembly and ground it to chassis.
4. Adjust VR1 (VR2) until voltmeter indicates 0V.
5. Connect DC voltmeter between No. 2 (18) and No. 1 (19) terminals.
6. Adjust VR3(VR4) so that voltmeter reads 20mV at 10 minutes after power is switched on.

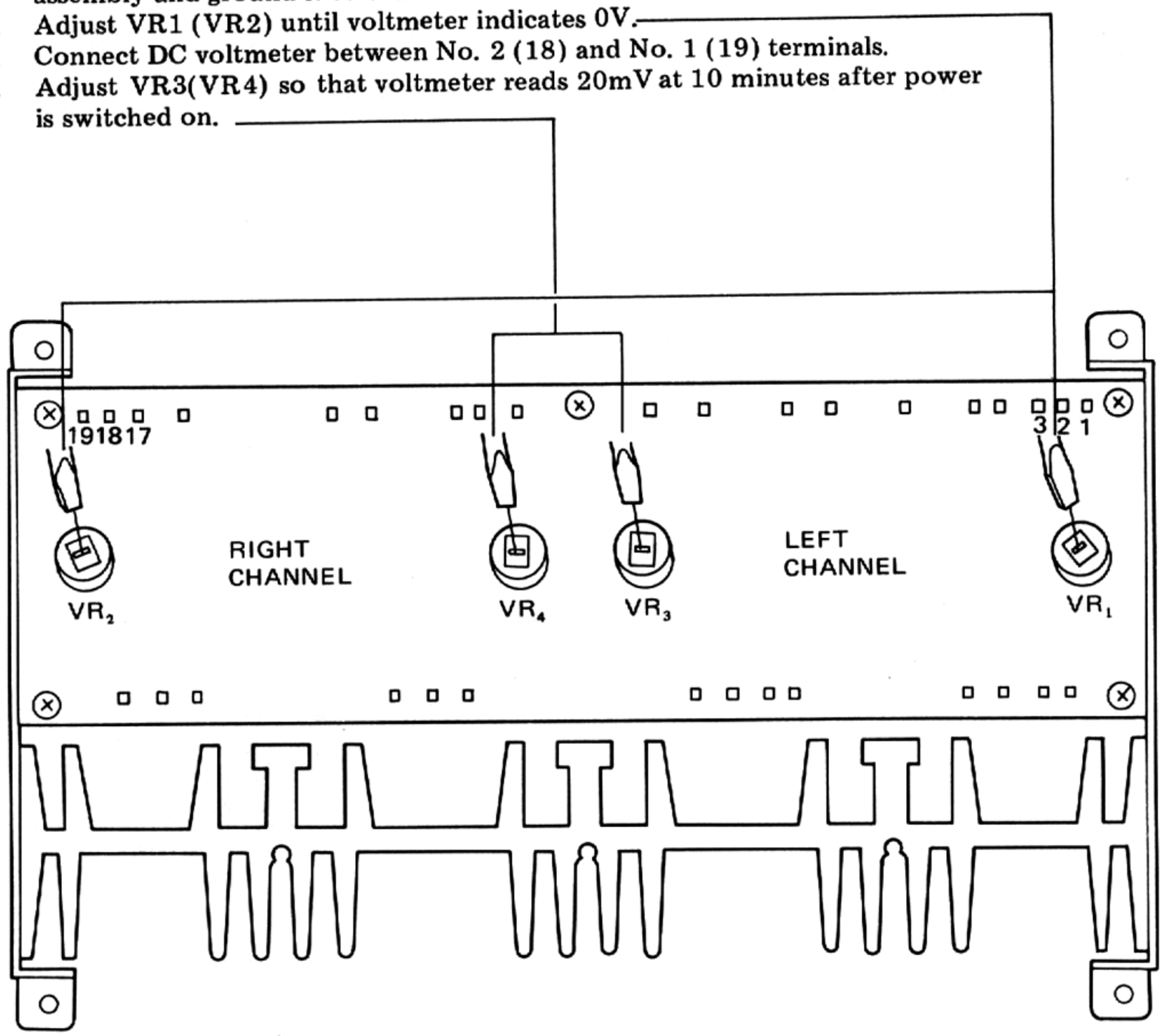

POWER AMPLIFIER ASSEMBLY (AWH-033)

ABGLEICHVERFAHREN

Abgleichen Des FM-Teils

1. Regeleinstellungen am SX-737:
   FUNCTION (Programmquellen-Wählschalter): FM (UKW)
   FM MUTING (FM-Stummabstimmung): OFF (niedergedrückt)
   POWER (Stramschalter): ON (Ein)
   REC SELECTOR (Aufnahme-Wählschalter): SOURCE (Programmquelle)
2. Anschließen des Prüfsatzes
   FM-Prüfsender (FM SG) . . . . . Ist über eine 300-Ohm-Ersatzantenne an die mit FM ANTENNA (UKW-Antenne) bezeichneten Anschlüsse anzuschließen.
   Wechselspannungsmesser . . . . . Sind parallelgeschaltet an die Anschlußbuchsen
   Klirrfaktormeßgerät Oszilloskop TAPE REC (Band/Aufnahme) anzuschließen.
3. Der Aüsgangspegel des FM-Prüsenders ist, 100% moduliert bei 400 Hz bei einer Frequenzabweichung von ±75 kHz, auf 100 dB einzustellen.
4. Der FM-Prüfsender und der SX-737 sind beide auf eine Anzeige von 87,4 MHz (Linke Ende der Skalen) einzustellen, wobei T4 so zu justieren ist, daß die Nadel des Signalmeßgerätes ganz nach rechts ausschlägt
5. T6 (unterer Kern) ist zu drehen und so einzustellen, daß die Nadel des Abstimm-Meters Zentriert ist.
6. Der FM-Prüfsender ist auf einen Ausgang von 8 — 10 dB einzustellen und T1, T2 und T3 sind zu drehen und auf einen maximalen Hörfrequenz-Ausgangspegel einzustellen.
7. Der FM-Prüfsender und der SX-737 sind beide auf eine Anzeige von 106 MHz einzustellen und TC4 ist so zu justieren, daß die Nadel des Signalmeßgerätes ganz nach rechts ausschlägt, wenn der FM-Prüfsender-Ausgang 100 dB beträgt.
8. Der FM-Prüfsendertist auf einen Ausgang von 8 — 10 dB einzustellen und TC1, TC2 und TC3 sind zu drehen und auf einen maximalen Hörfrequenz-Ausgangspegel einzustellen.
9. Der FM-Prüfsender und der SX-737 sind beide auf eine Anzeige von 90 MHz einzustellen und T5 ist so zu justieren, daßdie Nadel des Signalmeßgerätes ganz nach rechts ausschlägt, wenn der FM-Prüfsender-Ausgang 100 dB beträgt.
10. Der FM-Prüfsender ist auf einen Ausgang von 8 — 10 dB einzustellen und T1, T2 und T3 sind zu drehen und auf einen maximalen Hörfrequenz-Ausgangspegel einzustellen.

* Obige Schritte 7 — 10 sind mehrals nacheinander zu wiederholen, bis der maximale Ausgang erzielt wird, wenn die angegebenen Frequenzen angezeigt werden.

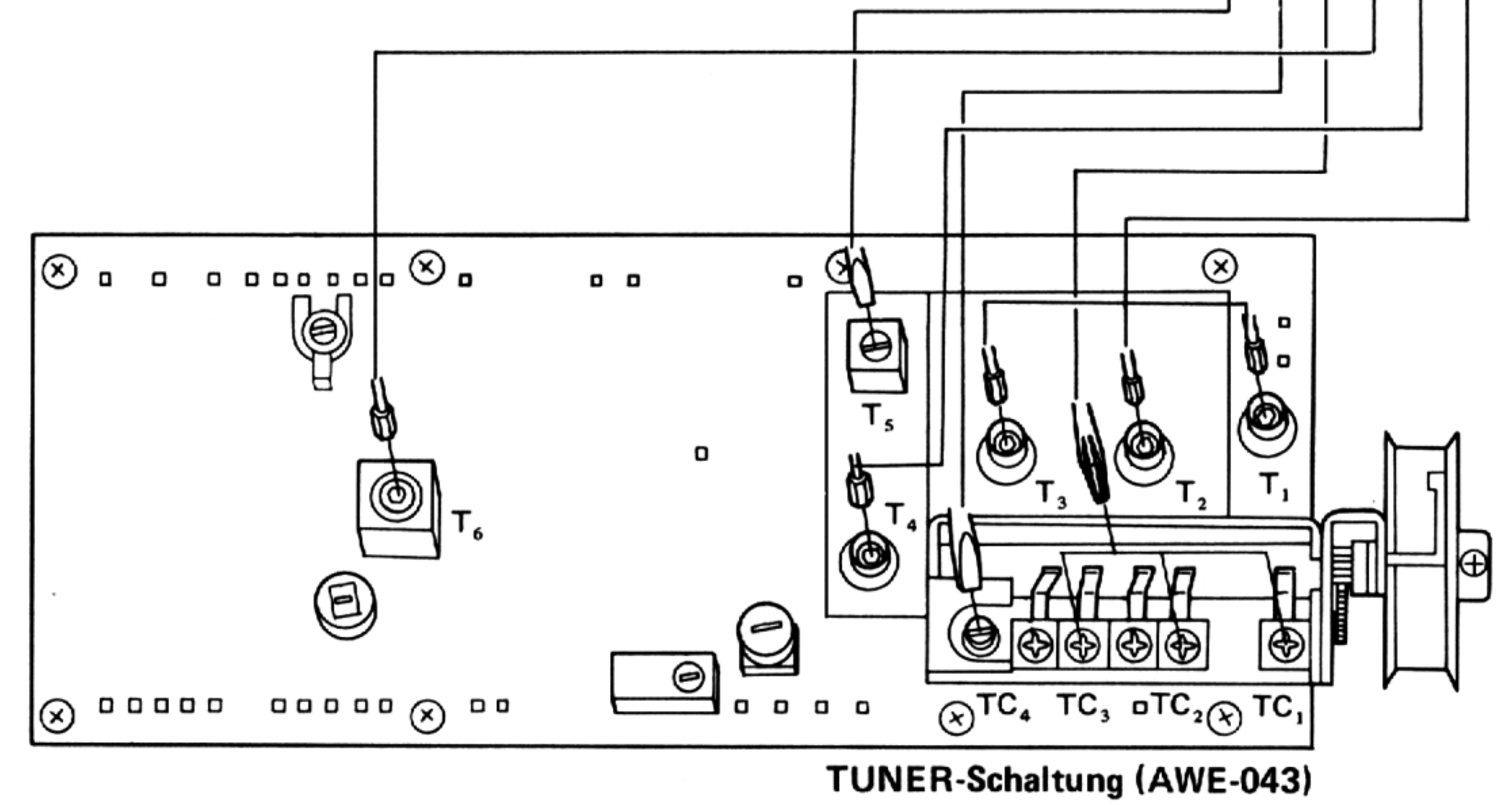

TUNER-Schaltung (AWE-043)

11. Der FM-Prüfsender und der SX-737 sind beide auf eine Anzeige von 90 MHz einzustellen und T5 ist so zu justieren, daß der maximale Hörfrequenz-Ausgangspegel erzielt wird, wenn der Ausgang des FM-Prüfsenders 8 — 10 dB beträgt.
12. Der SX-737 ist zu verstimmen, so daß nur Geräusche empfangen werden.
13. T6 (unterer Kern) ist zu drehen und so einzustellen, daß die Nadel des Abstimm-Meters zentriert ist.
14. Der FM-Prüfsender und der SX-737 sind beide auf eine Anzeige von 98 MHz einzustellen. Die Feinabstimmung des SX-737 ist unter Beachtung des Abstimm-Meters vorzunehmen.
15. Der Ausgang des FM-Prüfsenders ist auf 60 dB einzustellen und T6 (oberer Kern) ist zu drehen und so einzustellen, daß die Verzerrung minimal wird.
16. Der Ausgang des FM-Prüfsenders ist auf 100 dB einzustellen und VR1 ist so zu justieren, daß das Signalmeßgerät "5" anzeigt.

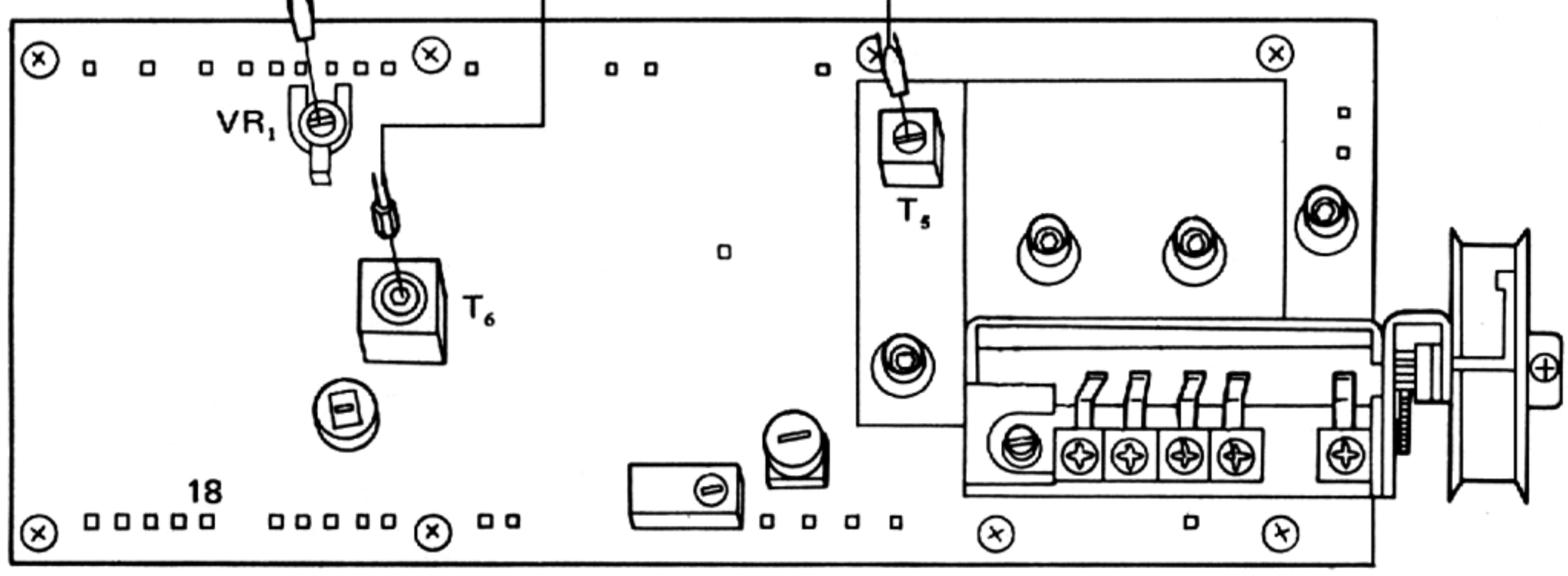

TUNER-Schaltung (AWE-043)

Abgleichen Des FM-MPX-Teils

* In den SX-737 ist ein PLL-Demodulator-Schaltkreis eingebaut. Diesser Abgleich sollte nur dann durchgeführt werden, wenn der MPX-Integralschaltkreis ausgewechselt wurde.
* Dieser Abgleich sollte nicht vor Beendigung des Abgleichs des FM-Teils durchgeführt werden.

1. Regeleinstellungen am SX-737:

FUNCTION (Programmquellen-Wählschalter):	FM (UKW)
FM MUTING (FM-Stummabstimmung):	OFF (niedergedrückt)
POWER (Stromschalter)	ON (Ein)
REC SELECTOR (Aufnahme-Wählschalter)	SOURCE (Programmquelle)

2. Anschließen des Prüfsatzes:

FM-Prüfsender (FM SG)	Ist über eine 300-Ohm-Ersatzantenne an die mit FM ANTENNA (UKW-Antenne) bezeichneten Anschlüsse anzuschließen.
Multiplex-Prüfsender (MPX SG) . .	Ist an die Außenmodulatoranschlüsse des FM-Prüfsenders anzuschließen.
Oszilloskop	Der horizontale Eingang ist mit den mit PILOT OUT (Kontrollausgang) bezeichneten Anschlüssen des Multiplex-Prüfsenders und der vertikale Eingang mit dem Anschluß Nr. 18 der Tuner-Einheit zu verbinden.
Klirrfaktormeßgerät	Ist an die Anschlußbuchsen TAPE REC (Band/Aufnahme) anzuschließen.

3. Der FM-Prüfsender und der SX-737 sind beide auf eine Anzeige von 98 MHz einzustellen.
4. Der Multiplex-Prüfsender ist auf eine Abweichung von ± 67,5 kHz bei 1 kHz für die linken und rechten Kanäle und der FM-Prüfsender auf einen Ausgang von 60 dB einzustellen.
5. Auf dem Oszillographen sind Lissajous'sche Schwingungsfiguren zu erzeugen und VR2 ist so einzustellen, daß die Schwingungen festgehalten werden.
6. Der Multiplex-Prüfsender ist auf eine Abweichung von ± 67,5 kHz bei 1 kHz für die linken und rechten Kanäle und auf eine Abweichung von ± 7,5 kHz für das 19-kHz-Steuersignal einzustellen. Der FM-Prüfsender ist auf einen Ausgang von 60 dB einzustellen.
7. T5 ist zu drehen und auf eine minimale Verzerrung der Hörfrequenzen des linken oder rechten Kanales einzustellen.

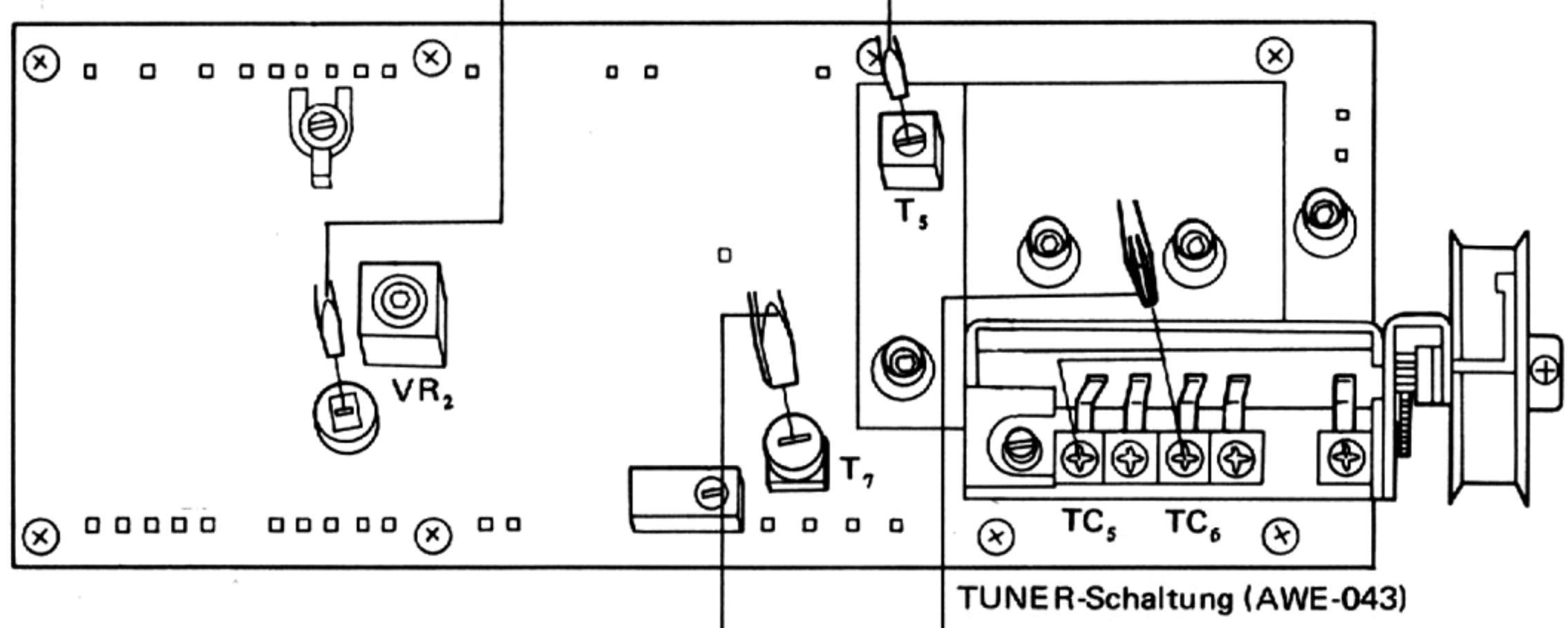

TUNER-Schaltung (AWE-043)

Abgleichen Des AM-Teils

1. Regeleinstellungen am SX-737:

FUNCTION (Programmquellen-Wählschalter)	AM (MW)
POWER (Stromschalter)	ON (Ein)
REC SELECTOR (Aufnahme-Wählschalter)	SOURCE (Programmquelle)

2. Anschließen des Prüfsatzes:

AM-Prüfsender (AM SG) . . . . . Ist reihengeschaltet mit der Ersatzantenne (1-kΩ-Widerstand) an die mit AM ANTENNA (MW-Antenne) bezeichneten Anschlüsse anzuschließen.

Wechselspannungsmesser . . . . . Ist an die Anschlußbuchsen TAPE REC (Band/Aufnahme) anzuschließen.

3. Der AM-Prüfsender ist auf eine 30% Modulation bei 400 Hz und einen Ausgang von 30 dB einzustellen.
4. Der AM-Prüfsender und der SX-737 sind beide auf eine Anzeige von 600 kHz einzustellen und T7 ist zu drehen und auf einen maximalen Hörfrequenz-Ausgangspegel einzustellen. (Gleichzeitig ist der Kern der Ferritstabantenne einzustellen).
5. Der AM-Prüfsender und der SX-737 sind beide auf eine Anzeige von 1 400 kHz einzustellen und TC5 und TC6 sind zu drehen und auf einen maximalen Hörfrequenz-Ausgangspegel einzustellen.

* Die obigen Schritte 4 und 5 sind mehrmals nacheinander zu wiederholen, bis der maximale Ausgang erzielt wird, wenn diese Frequenzen angezeigt werden.

Abgleichen Der Endverstärkerstufe

* Dieser Abgleich sollte durchgeführt werden, wenn einer der Transistoren in der Endverstärkerstufe ausgewechselt wurde.
* Die zuerst angegebenen Anschlüsse und VR-Nummern gelten für den linken Kanal und diejenigen in Klammer für den rechten Kanal.

1. Regeleinstellungen am SX-737:
   FUNCTION (Programmquellen-Wählschalter) : AUX (Reserveeingang)
   POWER (Stromschalter) : ON (Ein)
   SPEAKER (Lautsprecher): A (A-Taste niedergedrückt)
2. An die mit SPEAKER A (Lautsprecher A) bezeichneten Anschlüsse ist ein künstlicher Widerstand von 8Ω anzulegen. (An die Eingangsbuchsen (AUX) ist nichts anzuschließen).
3. Ein Gleichspannungsmesser ist an den Anschluß Nr. 3 (17) der Endverstärkerstufe anzuschließen und an dem Gehäuse zu erden.
4. VR1 (VR2) ist zu justieren, bis der Gleichspannungsmesser "0V" anzeigt.
5. Der Gleichspannungsmesser ist zwischen den Anschlüssen Nr. 2 (18) und Nr. 1 (19) anzuschließen.
6. VR3 (VR4) ist so zu justieren, daß der Gleichspannungsmesser 10 Minuten nach dem Einschalten des Stromes 20 mV anzeigt.

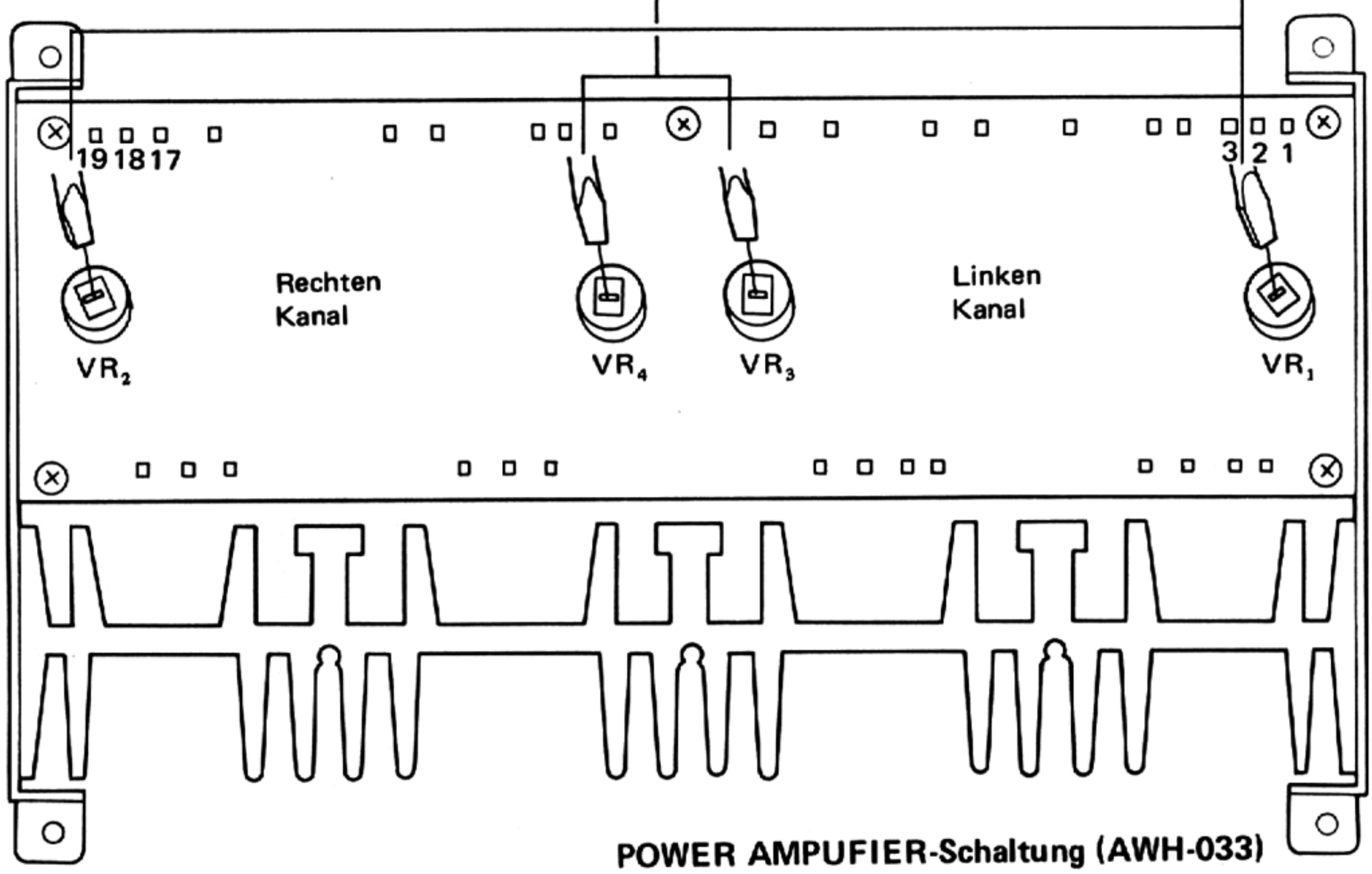

POWER AMPUFIER-Schaltung (AWH-033)

9. EXPLODED VIEW AND PARTS LIST

NOTE:
Parts number is subject to change for the purpose of improvement with notice of a service bulletin.
Service bulletin will be furnished whenever necessary and you are requested to amend parts number in this manual according to the instructions.

NOTICE: Any parts asterisked (*) are subject to being not supplied.

Parts List of Exploded View

Key No.	Description	Part No.	
1*	Lamp-held metal	ANF-260-0	
2	Pilot lamp socket	AKK-002-0	
3	Pilot lamp 8V, 0.3A (meter & dial scale)	E22-032-0	
4*	Meter lamp box	ANH-218-0	
5	Meter (signal & tuning)	AAW-032-0	
6*	Dial scale-held metal	ANG-105-0	
7	Dial scale	AAG-079-A	
8*	P.C. board cover	ANK-072-0	
9*	Wire clip-C	AEC-007-0	
10	Lamp board assembly	AWX-072-0	
11*	Lamp box	ANH-217-A	
12	Pilot lamp 8V, 50mA (program indicator)	AEL-022-0	
13*	Rubber bracket	AEB-060-0	
14	Electrolytic capacitor 6,800μF 50V	ACH-014-0	
15	Power transformer	ATT-186-0	KCU
	Power transformer	ATT-192-0	F
	Power transformer	ATT-191-0	GN
16*	Sub-chassis	ANF-259-0	
17	Power amplifier assembly	AWH-033-0	
18*	Pulley (small)	AEC-153-0	
19*	Pulley shaft	M49-025-E	
20*	Pulley (large)	AEC-101-0	
21	Phone jack (headphone)	K72-026-0	
22*	Sub-panel	AND-075-A	
23*	Shading plate	AED-025-A	
24	Spacer	AEC-116-0	
25	Front panel assembly	ANB-273-0	
26	Knob (power, tape monitor, filter, loudness)	ADD-040-B	
27	Knob (speakers)	ADD-082-B	
28	Knob (volume, balance, bass, treble, function, rec selector)	AAB-068-0	
29	Coupler (knob-to-switch)	AAE-007-0	
30	Knob (tuning)	AAA-024-0	

NOTICE: Any parts asterisked (*) are subject to being not supplied.

Key No.	Description	Part No.	
31	Knob (mode, FM muting)	AAD-054-0	
32	Spacer	AEC-152-B	
33	Bush	AEC-160-0	
34 *	Sponge rubber	AEC-119-0	
35	Nut (insulator)	AEC-085-0	
36	Spacer (insulator)	E32-045-0	
37	Lever switch (power)	ASK-066-0	KCU
	Lever switch (power)	ASK-067-0	F
	Lever switch (power)	ASK-068-0	GN
38	Speaker switch circuit assembly	AWS-076-0	
39	Control amplifier assembly	AWG-030-0	
40 *	Wire clip-A	AEC-004-0	
41 *	Wire clip-B	AEC-005-0	
42	Ground terminal strip (4P)	K13-047-0	
43	Tuning shaft assembly	AXA-057-0	
44	Push switch circuit assembly	AWS-077-0	
45	Microphone amplifier assembly	AWM-066-0	
46	Relay	ASR-007-0	
47	Switch & volume circuit assembly	AWX-071-0	
48	Power supply circuit assembly	AWR-057-0	KCU, F
	Power supply circuit assembly	AWR-058-0	GN
49 *	P.C. board holder	AEB-019-0	
50	Screw M4 x 15	ABA-010-A	
51	Washer	B21-011-0	
52	Wooden cabinet	AMM-040-0	
53	AC power cord	ADG-005-A	KCU
	AC power cord	ADG-004-0	F
54	AC cord grommet	AEC-079-0	KCU, F
	Connector (AC power)	AKP-008-0	GN
55 *	Rear panel	ANC-118-0	KCU
	Rear panel	ANC-119-0	F
	Rear paenl	ANC-120-0	GN
56	Speaker output terminal	AKA-001-0	
57	AC socket	AKP-004-0	KCU, F
58	Fuse holder (AC power)	AKR-007-0	KCU
	Fuse holder (AC power)	AKR-001-0	F
59 *	Wire supporter	M45-105-C	
60	Ground terminal strip (2P)	K13-048-0	
61 *	Wire clip	AEC-064-0	
62	Equalizer amplifier assembly	AWF-011-0	
63	Protection circuit assembly	AWM-025-C	
64	Foot assembly	AEC-061-A	
65 *	Chassis	ANA-069-A	
66	5P connector assembly	AWX-062-0	
67	Phono jack-A (4 jacks)	AKB-014-0	
68	Phono jack-B (4 jacks)	AKB-015-0	
69	Antenna terminal board	AKA-002-0	
70 *	Model name plate	AAL-183-0	KCU
	Model name plate	AAL-203-0	F
	Model name plate	AAL-185-0	GN

Continued on the Next Page

NOTICE: Any parts asterisked (*) are subject to being not supplied.

Key No.	Description	Part No.	
71	Antenna clamper	AEC-154-0	
72	AC cord grommet	AEC-079-0	
73	Ferrite antenna holder assembly	AXB-001-A	
74	Ferrite loopstick antenna	ATB-026-0	
75	Binding post for ground	AKE-017-0	
76	Tuner assembly	AWE-043-0	
77	Tuning pulley assembly	AXA-058-A	
78*	Wire supporter	M45-105-C	
79*	P.C. board-held metal-A	ANF-237-C	
80*	P.C. board-held metal-B	ANF-238-C	
81*	Bottom plate	ANE-058-0	
82	Dial pointer	AAF-020-0	
83	Serew	ABA-012-0	
84	Pilot lamp 8V,50mA(program indicator)	AEL-023-0	
85	Slide switch (de-emphasis)	ASH-008-0	GN
86	Small pulley	AEC-017-0	
87	Terminal strip (2P)	AKC-023-0	GN

10. SCHEMATIC DIAGRAMS, P.C. BOARD PATTERNS AND PARTS LIST

10.1 CIRCUIT CONNECTION DIAGRAM AND MISCELLANEOUS PARTS

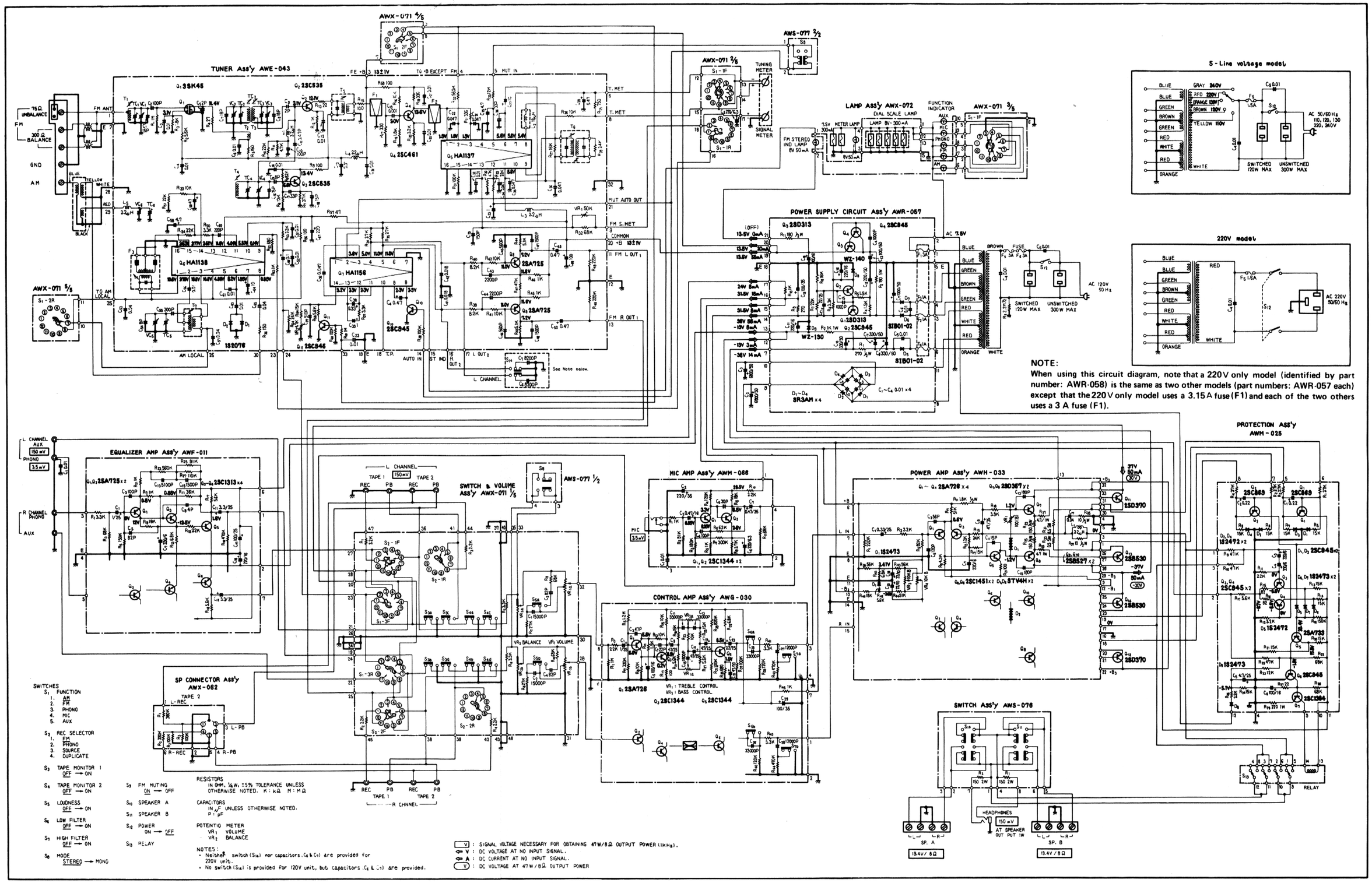

Exploded View

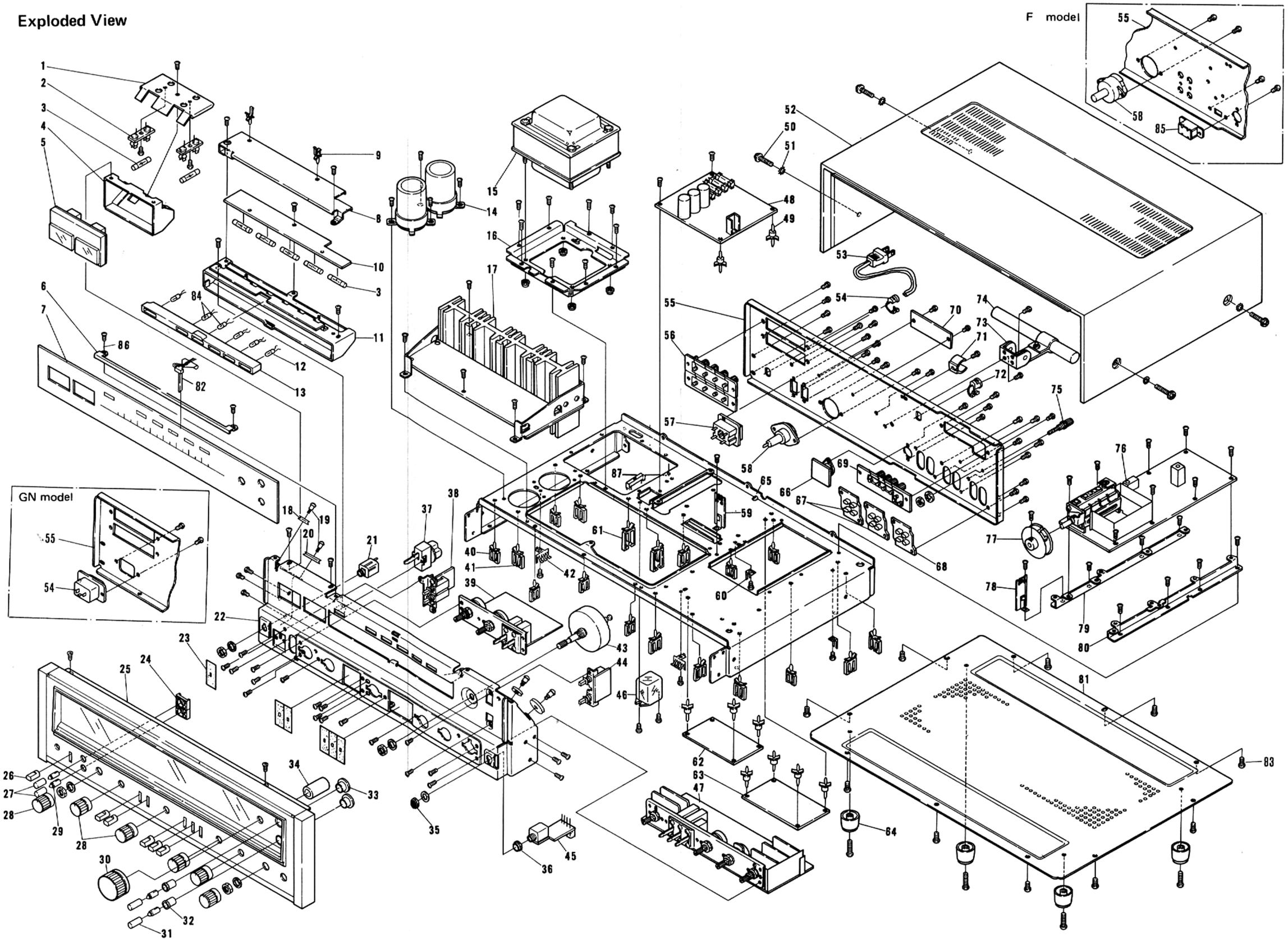

Miscellaneous Parts

- CAPACITORS: IN μF UNLESS OTHERWISE NOTED p: pF
- RESISTORS: INΩ, ¼W UNLESS OTHERWISE NOTED k: kΩ, M: MΩ

CAPACITORS

Symbol	Description			Part No.	
C1	Ceramic	0.01	50V	CKDYF 103Z 50	
C2	Electrolytic	6,800	50V	ACH-014-0	
C3	Electrolytic	6,800	50V	ACH-014-0	
C4	Ceramic	0.01	250V	ACG-003-0	KCU
	Ceramic	0.01	250V	ACG-001-0	F, GN
C5	Ceramic	0.01	250V	ACG-001-0	KCU, F
C6	Mylar	0.0082	50V	CQMA 822J 50	KCU, F
C7	Mylar	0.0082	50V	CQMA 822J 50	KCU, F

RESISTOR

Symbol	Description	Part No.	
R1	Carbon film 2.2M ½W	RD½PS 225J	KCU

SWITCHES

Symbol	Description	Part No.	
S12	Lever switch (power)	ASK-066-0	KCU
	Lever switch (power)	ASK-067-0	F
	Lever switch (power)	ASK-068-0	GN
S13	Relay	ASR-007-0	
S14	Slide switch (de-emphasis)	ASH-008-0	F

COILS AND TRANSFORMERS

Symbol	Description	Part No.	
	Power transformer	ATT-186-0	KCU
	Power transformer	ATT-192-0	F
	Power transformer	ATT-191-0	GN
	Ferrite loopstick antenna	ATB-026-0	
	Balun	T22-025-A	

OTHERS

Symbol	Description	Part No.	
	Tuner assembly	AWE-043-0	
	Equalizer amplifier assembly	AWF-011-0	
	Microphone amplifier assembly	AWM-066-0	
	Control amplifier assembly	AWG-030-0	
	Power amplifier assembly	AWH-033-0	
	Protection circuit assembly	AWM-025-C	
	Switch & volume circuit assembly	AWX-071-0	
	Speaker switch circuit assembly	AWS-076-0	
	Push switch circuit assembly	AWS-077-0	
	5P connector assembly	AWX-062-0	
	Power supply circuit assembly	AWR-057-0	KCU, F
	Power supply circuit assembly	AWR-058-0	GN
	Lamp board assembly	AWX-072-0	
	Front panel assembly	ANB-273-0	
	Wooden cabinet	AMM-040-0	

Continued on the Next Page

Symbol	Description	Part No.	
	Tuning pulley assembly	AXA-058-A	
	Tuning shaft assembly	AXA-057-0	
	Foot assembly	AEC-061-A	
	Knob (tuning)	AAA-024-0	
	Knob (power, filter, tape monitor, loudness)	AAD-040-B	
	Knob (volume, balance, bass, treble, function, rec selector)	AAB-068-0	
	Knob (mode, FM muting)	AAD-054-0	
	Dial scale	AAG-079-A	
	Dial pointer assembly	AAF-020-0	
	Meter (signal & tuning)	AAW-032-0	
	Knob (speakers)	AAD-082-B	
	Antenna terminal board	AKA-002-0	
	Speaker output terminal	AKA-001-0	
	Phono jack-A (4 jacks)	AKB-014-0	
	Phono jack-B (4 jacks)	AKB-015-0	
	Pilot lamp 8V,50mA (program indicator)	AEL-023-0	
	Binding post for ground	AKE-017-0	
	Pilot lamp 8V, 0.3A (dial scale)	E22-032-0	
	Pilot lamp 8V, 50mA (program indicator)	AEL-022-0	
F1	Fuse 3A (protection)	AEK-101-0	KCU, F
	Fuse 3.15A (protection)	AEK-042-0	GN
F2	Fuse 1A (protection)	AEK-106-0	KCU, F
	Fuse 1A (protection)	E21-031-0	GN
F3	Fuse 1A (protection)	AEK-106-0	KCU, F
	Fuse 1A (protection)	E21-031-0	GN
F4	Fuse 1A (protection)	AEK-106-0	KCU, F
	Fuse 1A (protection)	E21-031-0	GN
F5	Fuse 3A (AC power)	AEK-101-0	KCU
	Fuse 1.5A (AC power)	AEK-104-0	F
	Fuse 1.6A (protection)	AEK-013-0	GN
F6	Fuse 3A (protection)	AEK-003-0	KCU
	Fuse holder (AC power)	AKR-007-0	KCU
	Fuse holder (AC power)	AKR-001-0	F
	Connector (AC power)	AKP-008-0	GN
	Fuse holder (protection)	K91-008-0	GN
	Phone jack (headphone)	K72-026-0	
	AC socket	AKP-004-0	KCU, F
	Pilot lamp socket	AKK-002-0	
	AC power cord	ADG-005-A	KCU
	AC power cord	ADG-004-0	F
	Washer	B21-011-0	
	Screw M4x15	ABA-010-A	
	FM T-type antenna	ADH-002-0	
	Operating instructions (English)	ARB-105-0	
	Operating instructions (French/German)	ARD-069-0	
	Packing case	AHD-223-0	
	Inside packing	AHC-015-0	
	Side pad	AHA-068-0	

10.2 TUNER ASSEMBLY (AWE-043-0)

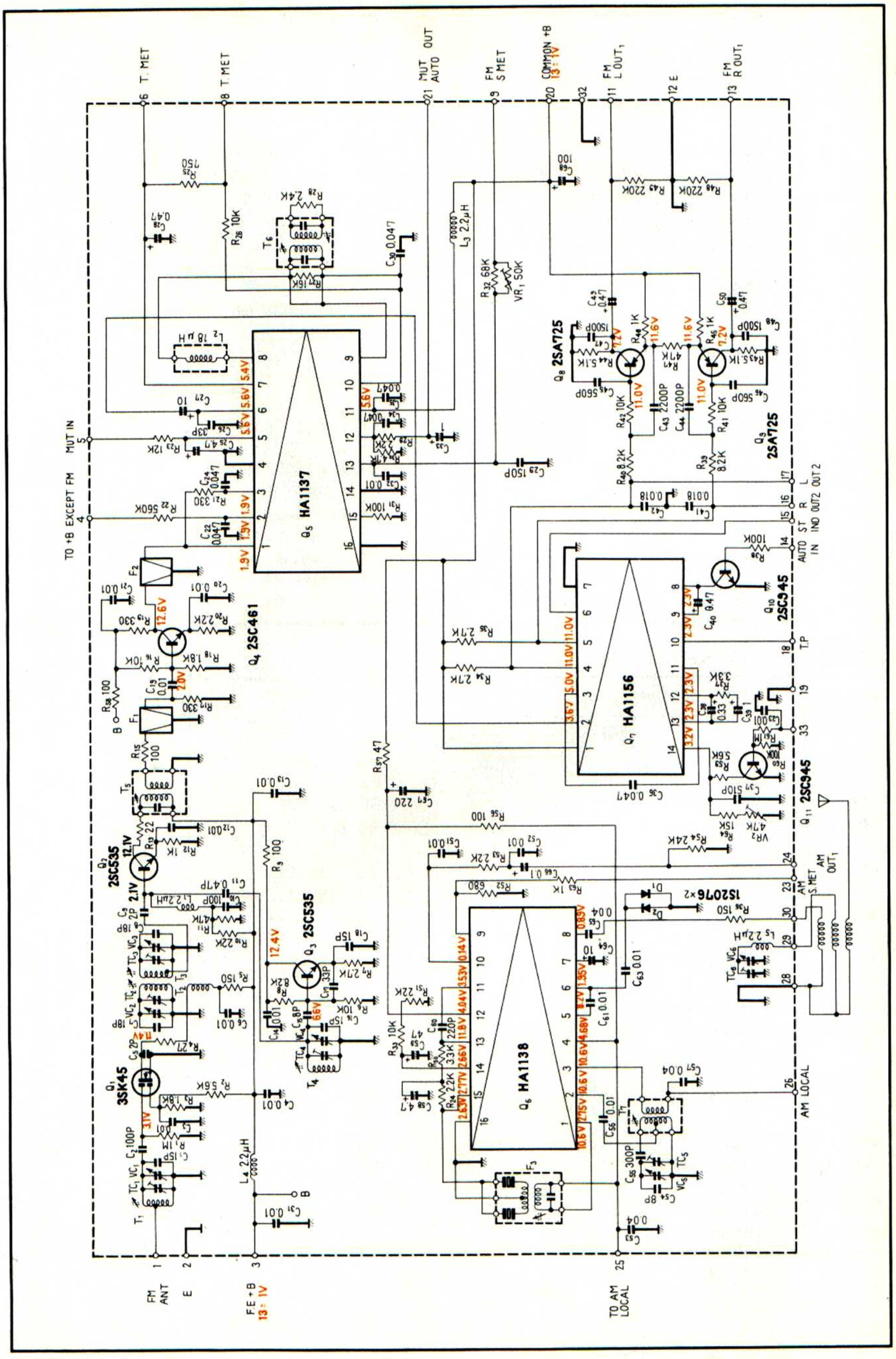

·3SK45

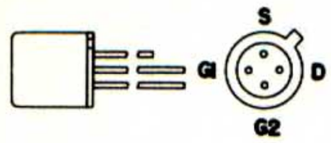

2SC535
2SC461

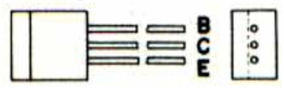

2SA763
2SC945

HA1137
HA1138

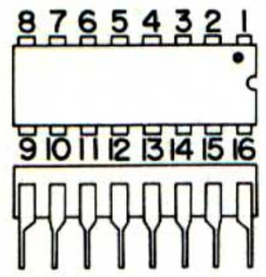

HA1156

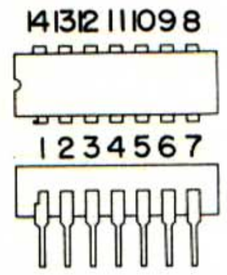

2SA725

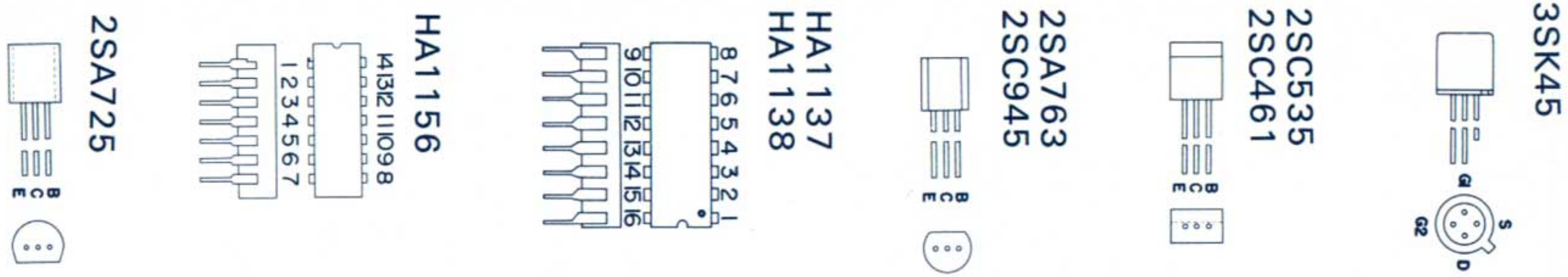

Foil Side (AWE-043-0)

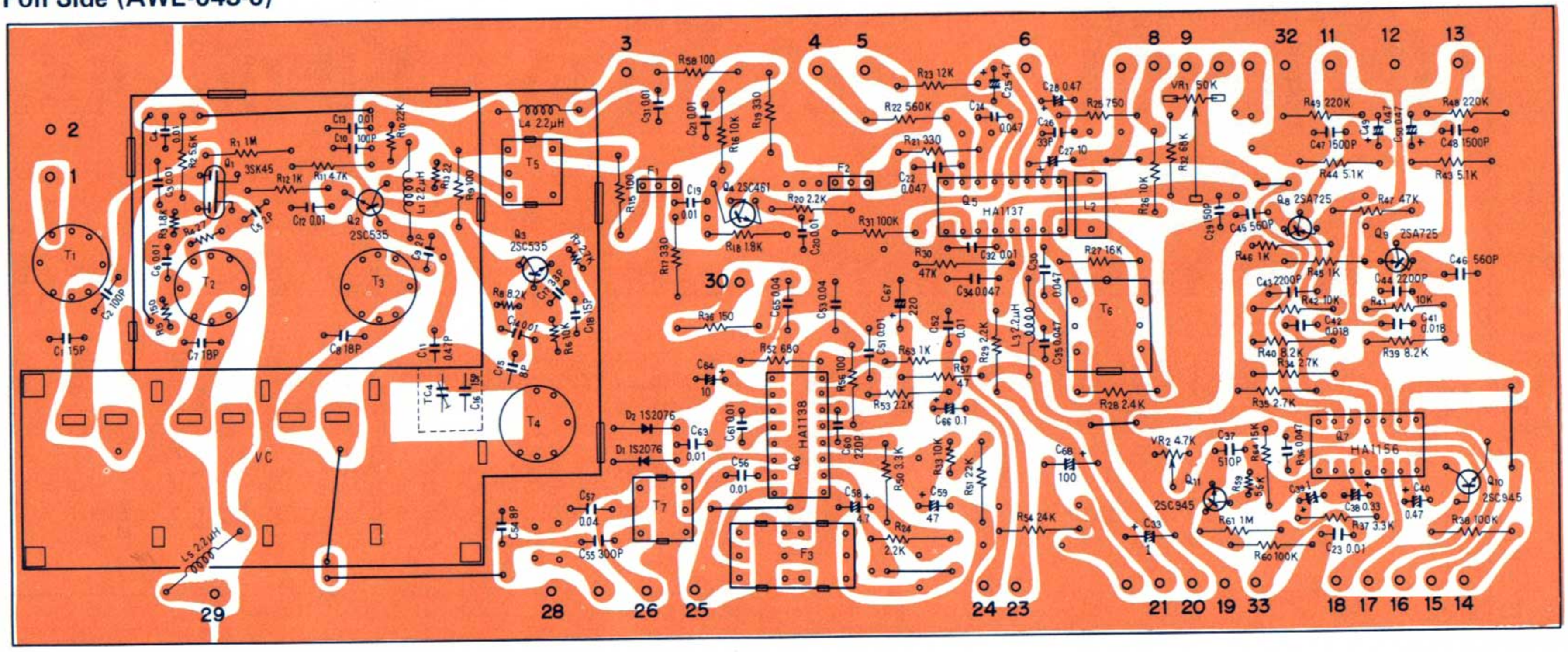

Parts List of Tuner Assembly (AWE-043-0)

CAPACITORS

Symbol	Description			Part No.	
VC	Tuning capacitor			ACK-005-0	
TC	Ceramic trimmer			C43-007-0	
C1	Ceramic	15p	50V	CCDSH 150K 50	
C2	Ceramic	100p	50V	CCDSL 101K 50	
C3	Ceramic	0.01	50V	CKDYF 103Z 50	
C4	Ceramic	0.01	50V	CKDYF 103Z 50	
C5	Ceramic	2p	50V	CCDSL 020C 50	
C6	Ceramic	0.01	50V	CKDYF 103Z 50	
C7	Ceramic	18p	50V	CCDSH 180K 50	
C8	Ceramic	18p	50V	CCDSH 180K 50	
C9	Ceramic	2p	50V	CCDSL 020C 50	
C10	Ceramic	100p	50V	CCDSL 101K 50	
C11	Ceramic	0.47p	50V	CGB R47K 50	
C12	Ceramic	0.01	50V	CKDYF 103Z 50	
C13	Ceramic	0.01	50V	CKDYF 103Z 50	
C14	Ceramic	0.01	50V	CKDYB 103K 50	
C15	Ceramic	8p	50V	CCDCH 080F 50	
C16	Ceramic	15p	50V	CCDLH 150K 50	
C17	Ceramic	33p	50V	CCDCH 330K 50	
C18	Ceramic	15p	50V	CCDCH 150K 50	
C19	Ceramic	0.01	50V	CKDYF 103Z 50	
C20	Ceramic	0.01	50V	CKDYF 103Z 50	
C21	Ceramic	0.01	50V	CKDYF 103Z 50	
C22	Ceramic	0.047	25V	CKDBC 473Z 25	
C23	Ceramic	0.01	50V	CKDYF 103Z 50	
C24	Ceramic	0.047	25V	CKDBC 473Z 25	
C25	Electrolytic	4.7	25V	CEA 4R7P 25	
C26	Ceramic	33p	50V	CCDSL 330K 50	
C27	Electrolytic	10	16V	CEA 100P 16	
C28	Electrolytic	0.47	50V	CEA R47P 50	
C29	Ceramic	150p	50V	CCDSL 151K 50	
C30	Ceramic	0.047	25V	CKDBC 473Z 25	
C31	Ceramic	0.01	50V	CKDYF 103Z 50	
C32	Ceramic	0.01	50V	CKDYF 103Z 50	
C33	Electrolytic	1	50V	CEA 010P 50	
C34	Ceramic	0.047	25V	CKDBC 473Z 25	
C35	Ceramic	0.047	25V	CKDBC 473Z 25	
C36	Mylar	0.047	50V	CQMA 473K 50	
C37	Styrol	510p	50V	CQSH 511J 50	
C38	Electrolytic	0.33	10V	CSSA R33M 10	
C39	Electrolytic	1	10V	CSSA 010M 10	
C40	Electrolytic	0.47	10V	CSSA R47M 10	
C41	Mylar	0.018	50V	CQMA 183J 50	
C42	Mylar	0.018	50V	CQMA 183J 50	
C43	Ceramic	0.0022	50V	CKDYB 222K 50	
C44	Ceramic	0.0022	50V	CKDYB 222K 50	
C45	Ceramic	560p	50V	CKDYB 561K 50	

Symbol	Description			Part No.	
C46	Ceramic	560p	50V	CKDYB 561K 50	
C47	Ceramic	0.0015	50V	CKDYB 152K 50	
C48	Ceramic	0.0015	50V	CKDYB 152K 50	
C49	Electrolytic	0.47	50V	CEA R47P 50	
C50	Electrolytic	0.47	50V	CEA R47P 50	
C51	Ceramic	0.01	50V	CKDYB 103K 50	
C52	Ceramic	0.01	50V	CKDYB 103K 50	
C53	Ceramic	0.04	50V	CKDYF 403Z 50	
C54	Ceramic	8p	50V	CCDXL 080F 50	
C55	Styrol	300p	50V	CQSA 301J 50	
C56	Mylar	0.01	50V	CQMA 103K 50	
C57	Ceramic	0.04	50V	CKDYF 403Z 50	
C58	Electrolytic	4.7	25V	CEA 4R7P 25	
C59	Electrolytic	47	6V	CEA 470P 6	
C60	Ceramic	220p	50V	CCDSL 221K 50	
C61	Ceramic	0.01	50V	CKDYF 103Z 50	
C62					
C63	Ceramic	0.01	50V	CKDYF 103Z 50	
C64	Electrolytic	10	16V	CEA 100P 16	
C65	Ceramic	0.04	50V	CKDYF 403Z 50	
C66	Electrolytic	0.1	25V	CSSA 0R1M 25	
C67	Electrolytic	220	16V	CEA 221P 16	
C68	Electrolytic	100	16V	CEA 101P 16	

RESISTORS AND POTENTIOMETERS

Symbol	Description		Part No.	
R1	Carbon film	1M	RD¼PS 105J	
R2	Carbon film	5.6k	RD¼PS 562J	
R3	Carbon film	1.8k	RD¼VS 182J	
R4	Carbon film	27	RD¼VS 270J	
R5	Carbon film	150	RD¼VS 151J	
R6	Carbon film	10k	RD¼VS 103J	
R7	Carbon film	2.7k	RD¼VS 272J	
R8	Carbon film	8.2k	RD¼VS 822J	
R9	Carbon film	100	RD¼PS 101J	
R10	Carbon film	22k	RD¼VS 22K	
R11	Carbon film	4.7k	RD¼PS 472J	
R12	Carbon film	1k	RD¼PS 102J	
R13	Carbon film	22	RD¼VS 220J	
R14				
R15	Carbon film	100	RD¼PS 101J	
R16	Carbon film	10k	RD¼PS 103J	
R17	Carbon film	330	RD¼PS 331J	
R18	Carbon film	1.8k	RD¼PS 182J	
R19	Carbon film	330	RD¼PS 331J	
R20	Carbon film	2.2k	RD¼PS 222J	

Symbol	Description	Part No.	
R21	Carbon film 330	RD¼PS 331J	
R22	Carbon film 560k	RD¼PS 564J	
R23	Carbon film 12k	RD¼PS 123J	
R24	Carbon film 2.2k	RD¼PS 222J	
R25	Carbon film 750	RD¼PS 751J	
R26	Carbon film 10k	RD¼PS 103J	
R27	Carbon film 16k	RD¼PS 163J	
R28	Carbon film 2.4k	RD¼PS 242J	
R29	Carbon film 2.2k	RD¼PS 222J	
R30	Carbon film 47k	RD¼PS 473J	
R31	Carbon film 100k	RD¼PS 104J	
R32	Carbon film 68k	RD¼PS 683J	
R33	Carbon film 10k	RD¼VS 103J	
R34	Carbon film 2.7k	RD¼PS 272J	
R35	Carbon film 2.7k	RD¼PS 272J	
R36	Carbon film 150	RD¼PS 151J	
R37	Carbon film 3.3k	RD¼PS 332J	
R38	Carbon film 100k	RD¼PS 104J	
R39	Carbon film 8.2k	RD¼PS 822J	
R40	Carbon film 8.2k	RD¼PS 822J	
R41	Carbon film 10k	RD¼PS 103J	
R42	Carbon film 10k	RD¼PS 103J	
R43	Carbon film 5.1k	RD¼PS 512J	
R44	Carbon film 5.1k	RD¼PS 512J	
R45	Carbon film 1k	RD¼PS 102J	
R46	Carbon film 1k	RD¼PS 102J	
R47	Carbon film 47k	RD¼PS 473J	
R48	Carbon film 220k	RD¼PS 224J	
R49	Carbon film 220k	RD¼PS 224J	
R50	Carbon film 3.3k	RD¼PS 332J	
R51	Carbon film 22k	RD¼PS 223J	
R52	Carbon film 680	RD¼PS 681J	
R53	Carbon film 2.2k	RD¼PS 222J	
R54	Carbon film 24k	RD¼PS 243J	
R55			
R56	Carbon film 100	RD¼PS 101J	
R57	Carbon film 47	RD¼PS 470J	
R58	Carbon film 100	RD¼PS 101J	
R59	Carbon film 5.6k	RD¼VS 562J	
R60	Carbon film 100k	RD¼PS 104J	
R61	Carbon film 1M	RD¼PS 105J	
R62			
R63	Carbon film 1k	RD¼PS 102J	
R64	Carbon film 15k	RD¼PS 153J	
VR1	Variable resistor, semi-fixed 50k-B	ACP-043-0	
VR2	Variable resistor, semi-fixed 4.7k-B	C92-051-0	

SEMICONDUCTORS

Symbol	Description		Part No.	
Q1	FET	3SK45-B		
Q2	Transistor	2SC535-B or A		
Q3	Transistor	2SC535-B or A		
Q4	Transistor	2SC461-B		
Q5	IC	HA1137		
Q6	IC	HA1138		
Q7	IC	HA1156		
Q8	Transistor	2SA725-F or G (2SA763P-5 or 6)		
Q9	Transistor	2SA725-F or G (2SA763P-5 or 6)		
Q10	Transistor	2SC945-Q or R		
Q11	Transistor	2SC945-Q or R		
D1	Diode	1S2076		
D2	Diode	1S2076		

TRANSFORMERS, COILS AND FILTERS

Symbol	Description	Part No.	
T1	FM antenna coil	ATC-021-0	
T2	FM RF coil	ARC-015-0	
T3	FM RF coil	ATC-016-0	
T4	FM OSC coil	ATC-022-0	
T5	FM matching transformer	ATE-008-0	
T6	FM IF transformer	T73-035-A	
T7	AM OSC coil	ATB-013-0	
F1	FM ceramic filter	ATF-013-0	
F2	FM ceramic filter	ATF-013-0	
F3	AM ceramic filter	ATF-009-0	
L1	RF choke coil	T24-028-A	
L2	Choke coil	ATH-007-0	
L3	RF choke coil	T24-028-A	
L4	RF choke coil	T24-028-A	
L5	RF choke coil	T24-028-A	

10.3 EQUALIZER AMPLIFIER ASSEMBLY (AWF-011-0)

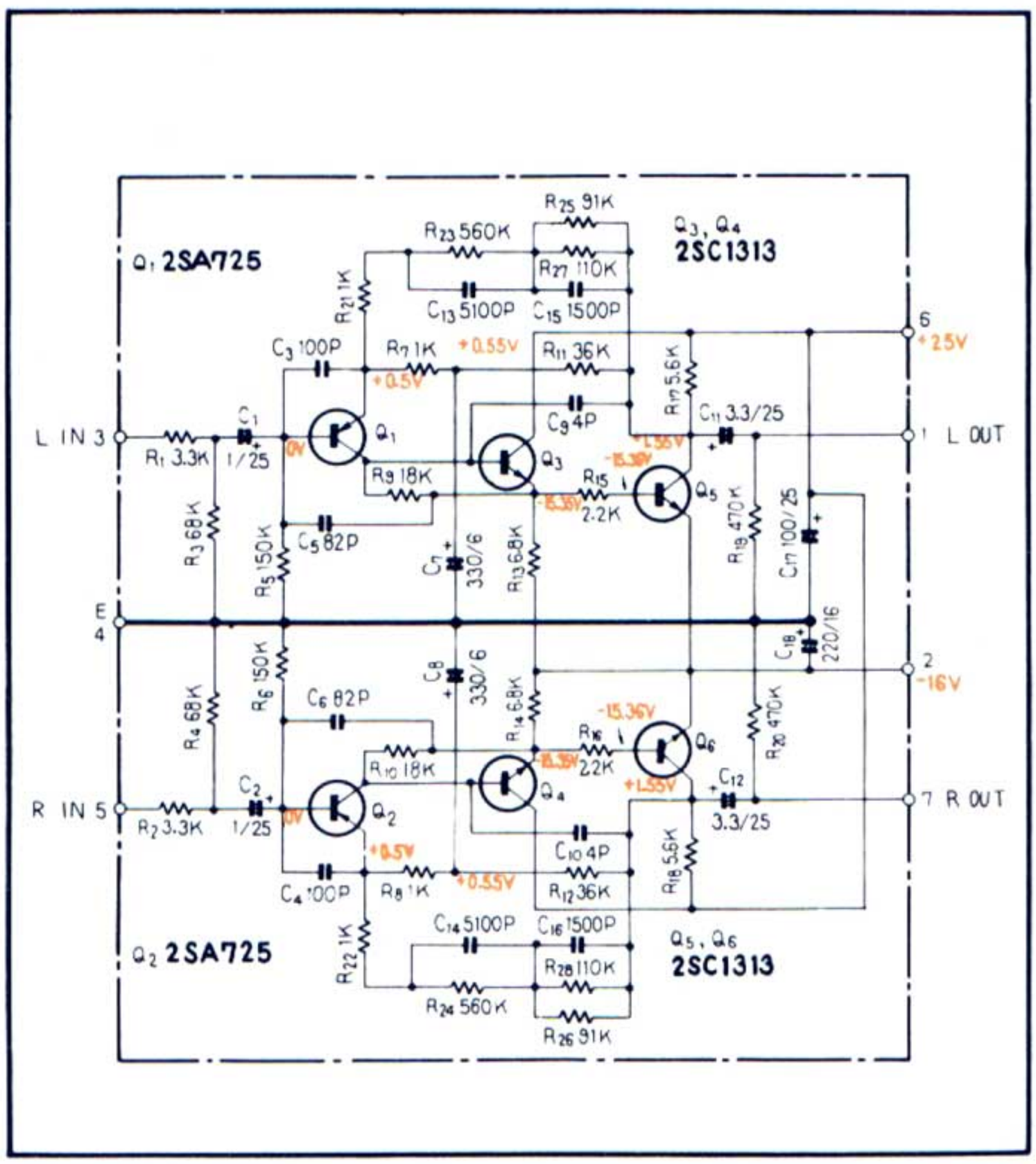

2SA725
2SC1313

2SC1345

2SA763P

Foil Side (AWF-011-0)

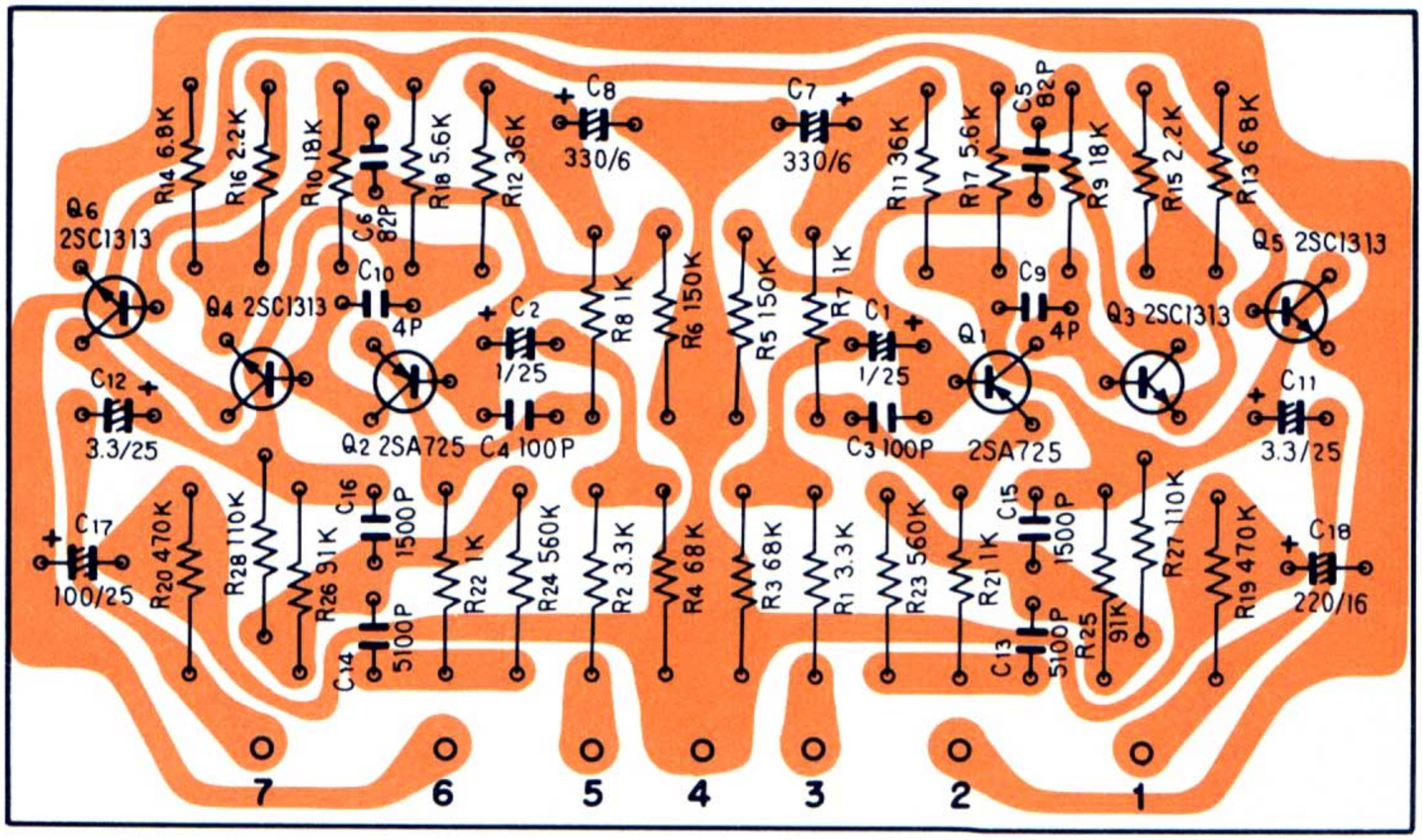

Parts List of Equalizer Amplifier Assembly (AWF-011-0)

CAPACITORS

Symbol	Description			Part No.	
C1	Electrolytic	1	25V	CSSA 101M 25	
C2	Electrolytic	1	25V	CSSA 101M 25	
C3	Ceramic	100p	50V	CCDSL 101K 50	
C4	Ceramic	100p	50V	CCDSL 101K 50	
C5	Ceramic	82p	50V	CCDSL 820K 50	
C6	Ceramic	82p	50V	CCDSL 820K 50	
C7	Electrolytic	330	6V	CEA 331P 6	
C8	Electrolytic	330	6V	CEA 331P 6	
C9	Ceramic	4p	50V	CCDSL 040D 50	
C10	Ceramic	4p	50V	CCDSL 040D 50	
C11	Electrolytic	3.3	25V	CEANL 3R3P 25	
C12	Electrolytic	3.3	25V	CEANL 3R3P 25	
C13	Styrol	0.0051	50V	CQSA 512G 50	
C14	Styrol	0.0051	50V	CQSA 512G 50	
C15	Styrol	0.0015	50V	CQSA 152G 50	
C16	Styrol	0.0015	50V	CQSA 152G 50	
C17	Electrolytic	100	25V	CEA 101P 25	
C18	Electrolytic	220	16V	CEA 221P 16	

RESISTORS

Symbol	Description		Part No.	
R1	Carbon film	3.3k	RD¼PS 332J	
R2	Carbon film	3.3k	RD¼PS 332J	
R3	Carbon film	68k	RD¼PS 683J	
R4	Carbon film	68k	RD¼PS 683J	
R5	Carbon film	150k	RD¼PS 154J	
R6	Carbon film	150k	RD¼PS 154J	
R7	Carbon film	1k	RD¼PS 102J	
R8	Carbon film	1k	RD¼PS 102J	
R9	Carbon film	18k	RD¼PS 183J	
R10	Carbon film	18k	RD¼PS 183J	
R11	Carbon film	36k	RD¼PS 363J	
R12	Carbon film	36k	RD¼PS 363J	
R13	Carbon film	6.8k	RD¼PS 682J	
R14	Carbon film	6.8k	RD¼PS 682J	
R15	Carbon film	2.2k	RD¼PS 222J	
R16	Carbon film	2.2k	RD¼PS 222J	
R17	Carbon film	5.6k	RD¼PS 562J	
R18	Carbon film	5.6k	RD¼PS 562J	
R19	Carbon film	470k	RD¼PS 474JNL	
R20	Carbon film	470k	RD¼PS 474JNL	

Symbol	Description		Part No.	
R21	Carbon film	1k	RD¼PS 102J	
R22	Carbon film	1k	RD¼PS 102J	
R23	Carbon film	560k	RD¼PS 564JNL	
R24	Carbon film	560k	RD¼PS 564JNL	
R25	Carbon film	91k	RD¼PS 913J	
R26	Carbon film	91k	RD¼PS 913J	
R27	Carbon film	110k	RD¼PS 114J	
R28	Carbon film	110k	RD¼PS 114J	

SEMICONDUCTORS

Symbol	Description		Part No.	
Q1	Transistor	2SA725-F or G (2SA763P-5 or 6)		
Q2	Transistor	2SA725-F or G (2SA763P-5 or 6)		
Q3	Transistor	2SC1313-G or F (2SC1345-E or D)		
Q4	Transistor	2SC1313-G or F (2SC1345-E or D)		
Q5	Transistor	2SC1313-G or F (2SC1345-E or D)		
Q6	Transistor	2SC1313-G or F (2SC1345-E or D)		

10.4 MICROPHONE AMPLIFIER ASSEMBLY (AWM-066-0)

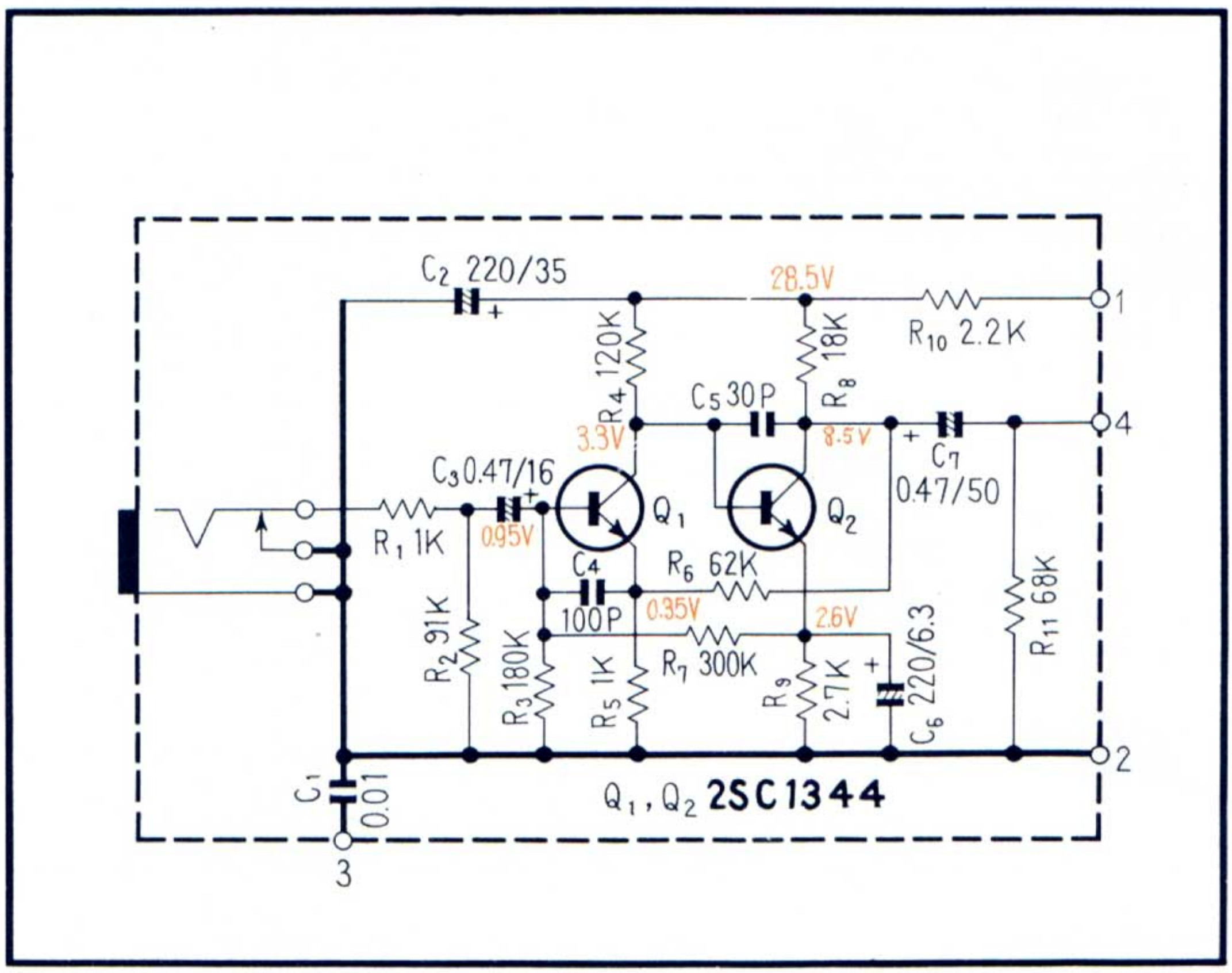

Foil Side (AWM-066-0)

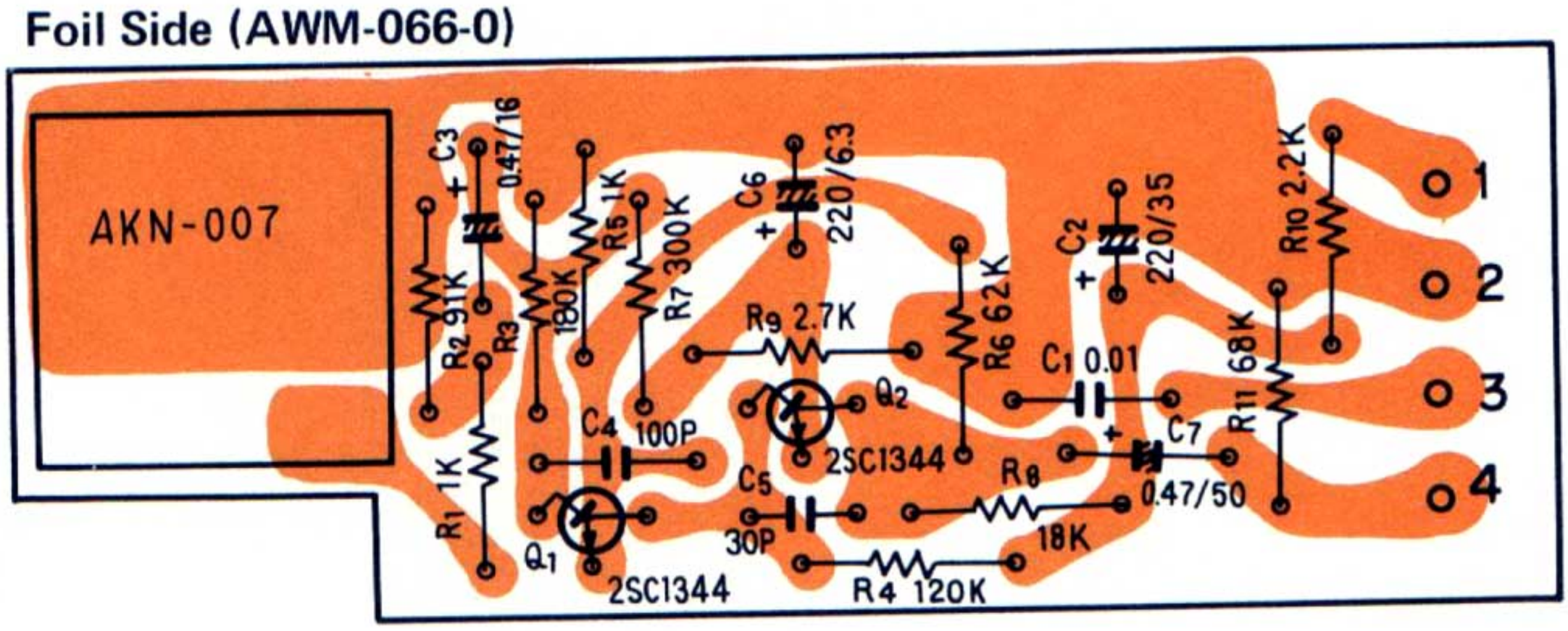

2SC1312

2SC1344

Parts List of Microphone Amplifier Assembly (AWM-066-0)

CAPACITORS

Symbol	Description			Part No.	
C1	Ceramic	0.01	50V	CKDYF 103Z 50	
C2	Electrolytic	220	35V	CEA 221P 35	
C3	Electrolytic	0.47	16V	CSSA R47M 16	
C4	Ceramic	100p	50V	CCDSL 101K 50	
C5	Ceramic	30p	50V	CCDSL 300K 50	
C6	Electrolytic	220	6V	CEA 221P 6	
C7	Electrolytic	0.47	50V	CEANL R47P 50	

RESISTORS

Symbol	Description		Part No.	
R1	Carbon film	1k	RD¼PM 102J	
R2	Carbon film	91k	RD¼PM 913J	
R3	Carbon film	180k	RD¼PM 184J	
R4	Carbon film	120k	RD¼PM 124J	
R5	Carbon film	1k	RD¼PM 102J	
R6	Carbon film	62k	RD¼PM 623J	
R7	Carbon film	300k	RD¼PM 304J	
R8	Carbon film	18k	RD¼PM 183J	
R9	Carbon film	2.7k	RD¼PM 272J	
R10	Carbon film	2.2k	RD¼PM 222J	
R11	Carbon film	68k	RD¼PM 683J	

SEMICONDUCTORS

Symbol	Description		Part No.	
Q1	Transistor	2SC1344-E or D (2SC1312-G or F)		
Q2	Transistor	2SC1344-E or D (2SC1312-G or F)		

OTHERS

Symbol	Description	Part No.	
	Phone jack (microphone)	AKN-007-0	

10.5 CONTROL AMPLIFIER ASSEMBLY (AWG-030-0)

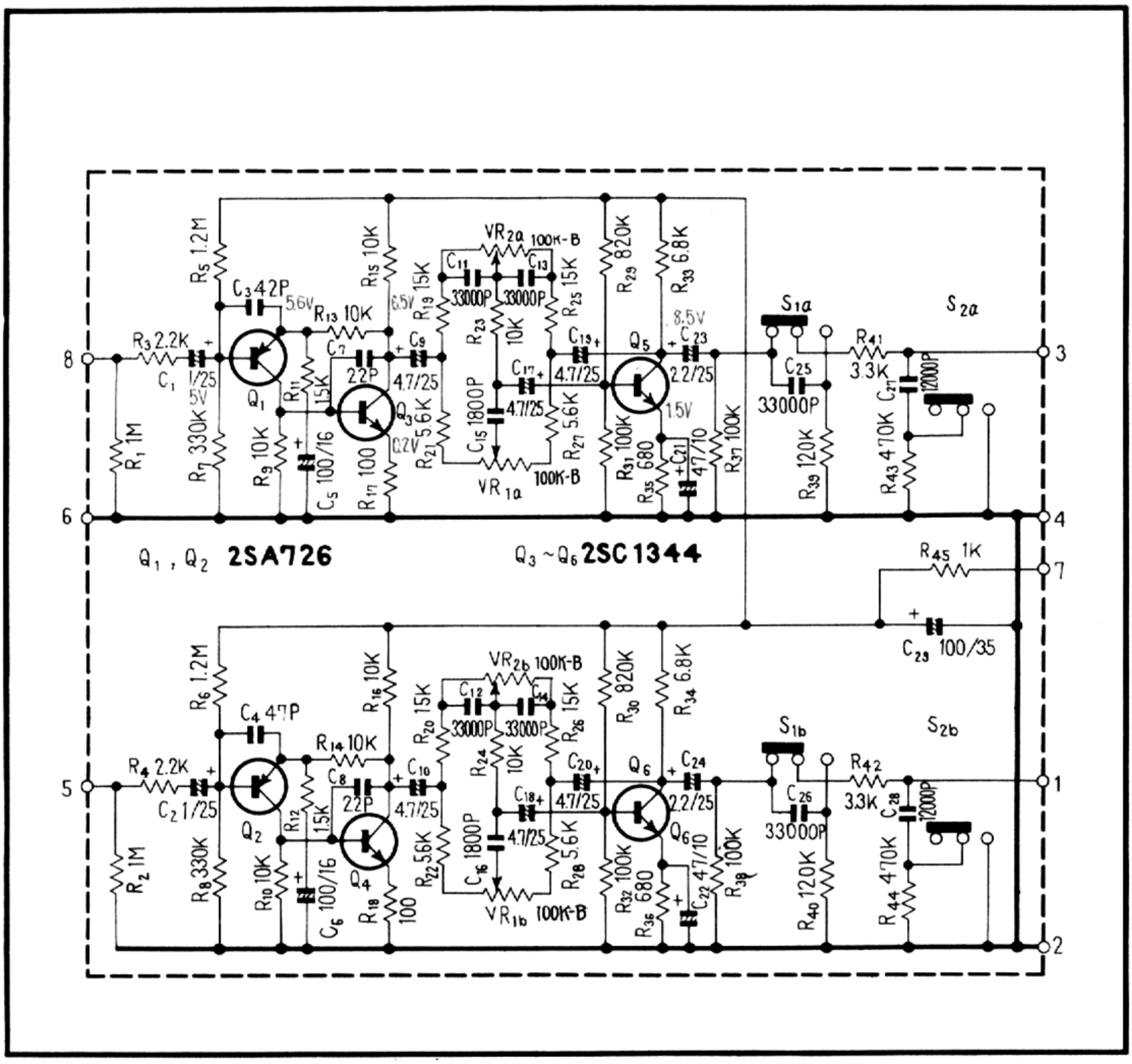

2SA726
2SC1312

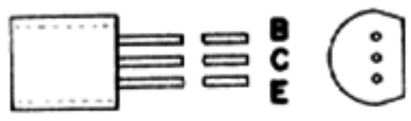

2SC1344

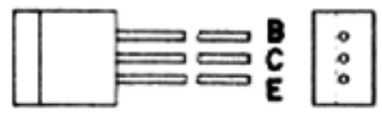

Foil Side (AWG-030-0)

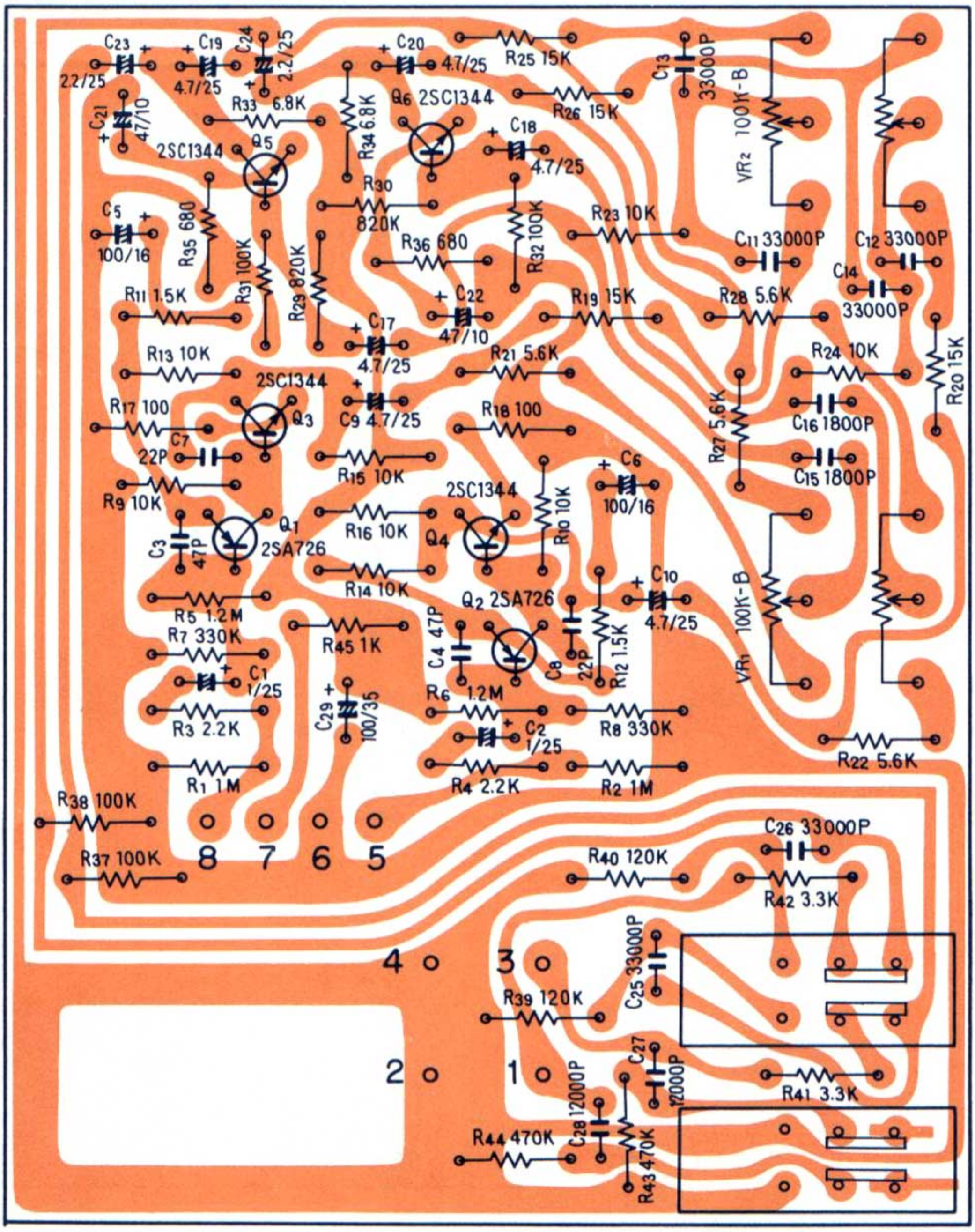

Parts List of Control Amplifier Assembly (AWG-030-0)

CAPACITORS

Symbol	Description			Part No.	
C1	Electrolytic	1	25V	CSZA 010M 25	
C2	Electrolytic	1	25V	CSZA 010M 25	
C3	Ceramic	47p	50V	CCDSL 470K 50	
C4	Ceramic	47p	50V	CCDSL 470K 50	
C5	Electrolytic	100	16V	CEA 101P 16	
C6	Electrolytic	100	16V	CEA 101P 16	
C7	Ceramic	22p	50V	CCDSL 220K 50	
C8	Ceramic	22p	50V	CCDSL 220K 50	
C9	Electrolytic	4.7	25V	CEANL 4R7P 25	
C10	Electrolytic	4.7	25V	CEANL 4R7P 25	
C11	Mylar	0.033	50V	CQMA 333J 50	
C12	Mylar	0.033	50V	CQMA 333J 50	
C13	Mylar	0.033	50V	CQMA 333J 50	
C14	Mylar	0.033	50V	CQMA 333J 50	
C15	Mylar	0.0018	50V	CQMA 182J 50	
C16	Mylar	0.0018	50V	CQMA 182J 50	
C17	Electrolytic	4.7	25V	CEANL 4R7P 25	
C18	Electrolytic	4.7	25V	CEANL 4R7P 25	
C19	Electrolytic	4.7	25V	CEANL 4R7P 25	
C20	Electrolytic	4.7	25V	CEANL 4R7P 25	
C21	Electrolytic	47	10V	CEA 470P 10	
C22	Electrolytic	47	10V	CEA 470P 10	
C23	Electrolytic	2.2	25V	CSSA 2R2M 25	
C24	Electrolytic	2.2	25V	CSSA 2R2M 25	
C25	Mylar	0.033	50V	CQMA 333J 50	
C26	Mylar	0.033	50V	CQMA 333J 50	
C27	Mylar	0.012	50V	CQMA 123J 50	
C28	Mylar	0.012	50V	CQMA 123J 50	
C29	Electrolytic	100	35V	CEA 101P 35	

RESISTORS AND POTENTIOMETERS

Symbol	Description		Part No.	
VR1	Variable resistor	100k-B(treble)	ACV-136-0	
VR2	Variable resistor	100k-B(bass)	ACV-136-0	
R1	Carbon film	1M	RD¼PM 105J	
R2	Carbon film	1M	RD¼PM 105J	
R3	Carbon film	2.2k	RD¼PM 222J	
R4	Carbon film	2.2k	RD¼PM 222J	
R5	Carbon film	1.2M	RD¼PM 125J	
R6	Carbon film	1.2M	RD¼PM 125J	
R7	Carbon film	330k	RD¼PM 334J	
R8	Carbon film	330k	RD¼PM 334J	
R9	Carbon film	10k	RD¼PM 103J	
R10	Carbon film	10k	RD¼PM 103J	
R11	Carbon film	1.5k	RD¼PM 152J	
R12	Carbon film	1.5k	RD¼PM 152J	
R13	Carbon film	10k	RD¼PM 103J	

Symbol	Description		Part No.	
R14	Carbon film	10k	RD¼PM 103J	
R15	Carbon film	10k	RD¼PM 103J	
R16	Carbon film	10k	RD¼PM 103J	
R17	Carbon film	100	RD¼PM 101J	
R18	Carbon film	100	RD¼PM 101J	
R19	Carbon film	15k	RD¼PM 153J	
R20	Carbon film	15k	RD¼PM 153J	
R21	Carbon film	5.6k	RD¼PM 562J	
R22	Carbon film	5.6k	RD¼PM 562J	
R23	Carbon film	10k	RD¼PM 103J	
R24	Carbon film	10k	RD¼PM 103J	
R25	Carbon film	15k	RD¼PM 153J	
R26	Carbon film	15k	RD¼PM 153J	
R27	Carbon film	5.6k	RD¼PM 562J	
R28	Carbon film	5.6k	RD¼PM 562J	
R29	Carbon film	820k	RD¼PM 824J	
R30	Carbon film	820k	RD¼PM 824J	
R31	Carbon film	100k	RD¼PM 104J	
R32	Carbon film	100k	RD¼PM 104J	
R33	Carbon film	6.8k	RD¼PM 682J	
R34	Carbon film	6.8k	RD¼PM 682J	
R35	Carbon film	680	RD¼PM 681J	
R36	Carbon film	680	RD¼PM 681J	
R37	Carbon film	100k	RD¼PM 104J	
R38	Carbon film	100k	RD¼PM 104J	
R39	Carbon film	120k	RD¼PM 124J	
R40	Carbon film	120k	RD¼PM 124J	
R41	Carbon film	3.3k	RD¼PM 332J	
R42	Carbon film	3.3k	RD¼PM 332J	
R43	Carbon film	470k	RD¼PM 474J	
R44	Carbon film	470k	RD¼PM 474J	
R45	Carbon film	1k	RD¼PM 102J	

SEMICONDUCTORS

Symbol	Description		Part No.	
Q1	Transistor	2SA726-F or G		
Q2	Transistor	2SA726-F or G		
Q3	Transistor	2SC1344-E or F (2SC1312-E, F or G)		
Q4	Transistor	2SC1344-E or F (2SC1312-E, F or G)		
Q5	Transistor	2SC1344-E or F (2SC1312-E, F or G)		
Q6	Transistor	2SC1344-E or F (2SC1312-E, F or G)		

SWITCHES

Symbol	Description	Part No.	
S1	Lever switch (turn over)	ASK-062-0	
S2	Lever switch (turn over)	ASK-062-0	

10.6 POWER AMPLIFIER ASSEMBLY (AWH-033-0)

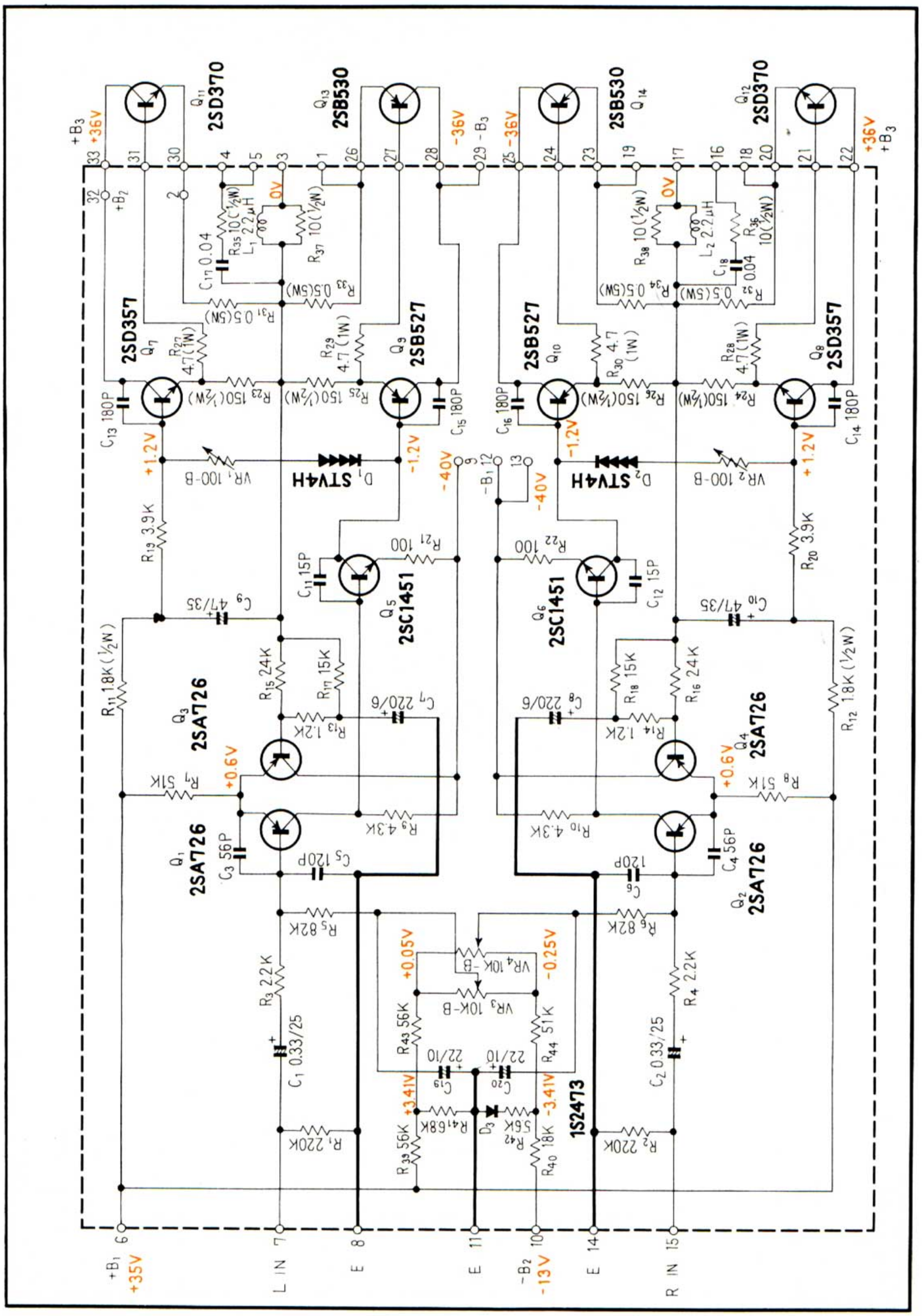

2SA640
2SA763

2SA726

2SC1451

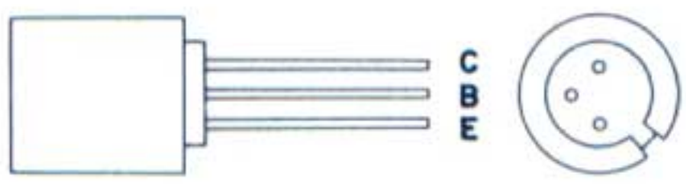

2SD357
2SB527

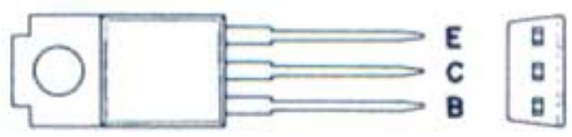

2SD370
2SD388
2SC1403
2SB530
2SB541
2SA745

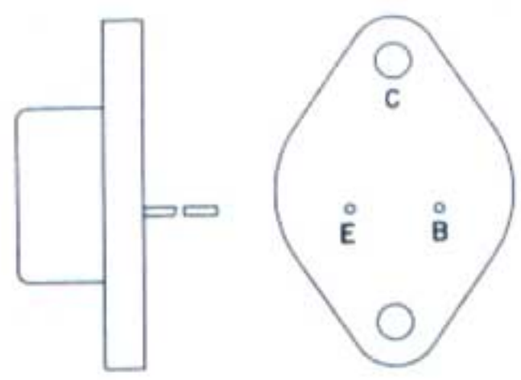

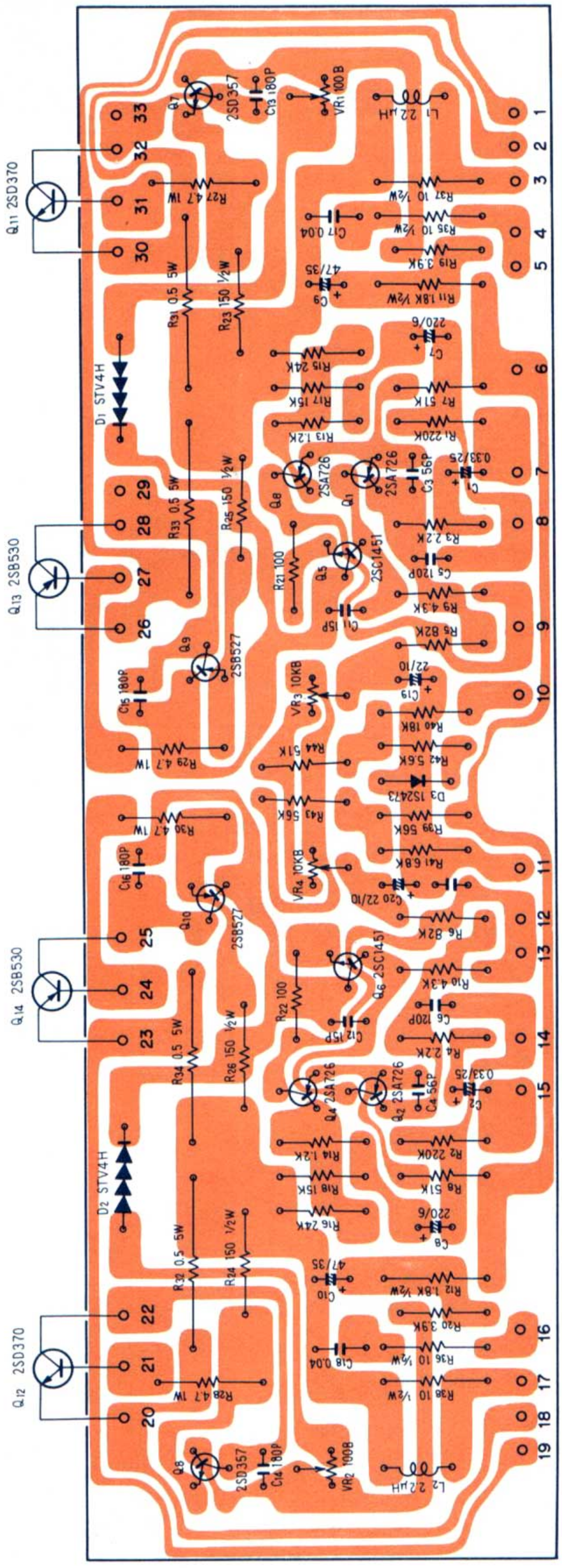

Foil Side (AWH-033-0)

Parts List of Power Amplifier Assembly (AWH-033-0)

CAPACITORS

Symbol	Description			Part No.	
C1	Electrolytic	0.33	25V	CSSA R33M 25	
C2	Electrolytic	0.33	25V	CSSA R33M 25	
C3	Ceramic	56p	50V	CCDSL 560K 50	
C4	Ceramic	56p	50V	CCDSL 560K 50	
C5	Ceramic	120p	50V	CCDSL 121K 50	
C6	Ceramic	120p	50V	CCDSL 121K 50	
C7	Electrolytic	220	6V	CEA 221P 6	
C8	Electrolytic	220	6V	CEA 221P 6	
C9	Electrolytic	47	35V	CEA 470P 35	
C10	Electrolytic	47	35V	CEA 470P 35	
C11	Ceramic	15p	50V	CCDSL 150K 50	
C12	Ceramic	15p	50V	CCDSL 150K 50	
C13	Ceramic	180p	50V	CCDSL 181K 50	
C14	Ceramic	180p	50V	CCDSL 181K 50	
C15	Ceramic	180p	50V	CCDSL 181K 50	
C16	Ceramic	180p	50V	CCDSL 181K 50	
C17	Ceramic	0.04	50V	CKDYF 403Z 50	
C18	Ceramic	0.04	50V	CKDYF 403Z 50	
C19	Electrolytic	22	10V	CEA 220P 10	
C20	Electrolytic	22	10V	CEA 220P 10	

RESISTORS AND POTENTIOMETERS

Symbol	Description			Part No.	
VR1	Variable resistor, semi-fixed 100-B			C92-063-0	
VR2	Variable resistor, semi-fixed 100-B			C92-063-0	
VR3	Variable resistor, semi-fixed 10k-B			C92-049-0	
VR4	Variable resistor, semi-fixed 10k-B			C92-049-0	
R1	Carbon film	220k		RD¼PS 224J	
R2	Carbon film	220k		RD¼PS 224J	
R3	Carbon film	2.2k		RD¼PS 222J	
R4	Carbon film	2.2k		RD¼PS 222J	
R5	Carbon film	82k		RD¼PS 823J	
R6	Carbon film	82k		RD¼PS 823J	
R7	Carbon film	51k		RD¼PS 513J	
R8	Carbon film	51k		RD¼PS 513J	
R9	Carbon film	4.3k		RD¼PS 432J	
R10	Carbon film	4.3k		RD¼PS 432J	
R11	Carbon film	1.8k	½W	RD½PS 182J	
R12	Carbon film	1.8k	½W	RD½PS 182J	
R13	Carbon film	1.2k		RD¼PS 122J	
R14	Carbon film	1.2k		RD¼PS 122J	
R15	Carbon film	24k		RD¼PS 243J	
R16	Carbon film	24k		RD¼PS 243J	
R17	Carbon film	15k		RD¼PS 153J	
R18	Carbon film	15k		RD¼PS 153J	
R19	Carbon film	3.9k		RD¼PS 392J	
R20	Carbon film	3.9k		RD¼PS 392J	

Symbol	Description			Part No.	
R21	Carbon film	100		RD¼PS 101J	
R22	Carbon film	100		RD¼PS 101J	
R23	Carbon film	150	½W	RD½PS 151J	
R24	Carbon film	150	½W	RD½PS 151J	
R25	Carbon film	150	½W	RD½PS 151J	
R26	Carbon film	150	½W	RD½PS 151J	
R27	Metal film	4.7	1W	RN1H 4R7K	
R28	Metal film	4.7	1W	RN1H 4R7K	
R29	Metal film	4.7	1W	RN1H 4R7K	
R30	Metal film	4.7	1W	RN1H 4R7K	
R31	Wire wound	0.5	5W	RT5B 0R5K	
R32	Wire wound	0.5	5W	RT5B 0R5K	
R33	Wire wound	0.5	5W	RT5B 0R5K	
R34	Wire wound	0.5	5W	RT5B 0R5K	
R35	Carbon film	10	½W	RD½PS 100J	
R36	Carbon film	10	½W	RD½PS 100J	
R37	Carbon film	10	½W	RD½PS 100J	
R38	Carbon film	10	½W	RD½PS 100J	
R39	Carbon film	56k		RD¼PS 563J	
R40	Carbon film	18k		RD¼PS 183J	
R41	Carbon film	6.8k		RD¼PS 682J	
R42	Carbon film	5.6k		RD¼PS 562J	
R43	Carbon film	56k		RD¼PS 563J	
R44	Carbon film	51k		RD¼PS 513J	

SEMICONDUCTORS

Symbol	Description		Part No.	
Q1	Transistor	2SA726-G or F (2SA763F-5 or 6) (2SA640-K or L)		
Q2	Transistor	2SA726-G or F (2SA763F-5 or 6) (2SA640-K or L)		
Q3	Transistor	2SA726-G or F (2SA763F-5 or 6) (2SA640-K or L)		
Q4	Transistor	2SA726-G or F (2SA763F-5 or 6) (2SA640-K or L)		
Q5	Transistor	2SC1451-V, B or G		
Q6	Transistor	2SC1451-V, B or G		
Q7	Transistor	2SD357-C or D		
Q8	Transistor	2SD357-C or D		
Q9	Transistor	2SB527-C or D		
Q10	Transistor	2SB527-C or D		

Continued on the Next Page

Symbol	Description		Part No.	
Q11	Transistor	2SD370-O, R or Y (2SD388-Q, R or S) (2SC1403-R, O or Y)		
Q12	Transistor	2SD370-O, R or Y (2SD388-Q, R or S) (2SC1403-R, O or Y)		
Q13	Transistor	2SB530-O, R or Y (2SB541-Q, R or S) (2SA745-R, O or Y)		
Q14	Transistor	2SB530-O, R or Y (2SB541-Q, R or S) (2SA745-R, O or Y)		
D1	Varistor	STV4H		
D2	Varistor	STV4H		
D3	Diode	1S2473		

OTHERS

Symbol	Description	Part No.	
L1	AF choke coil	T63-009-0	
L2	AF choke coil	T63-009-0	
	Power transistor socket	AKH-001-0	
	Spacer (insulator)	AEC-076-0	
	Heat sink (small)	ANH-135-A	

10.7 PROTECTION CIRCUIT ASSEMBLY (AWM-025-C)

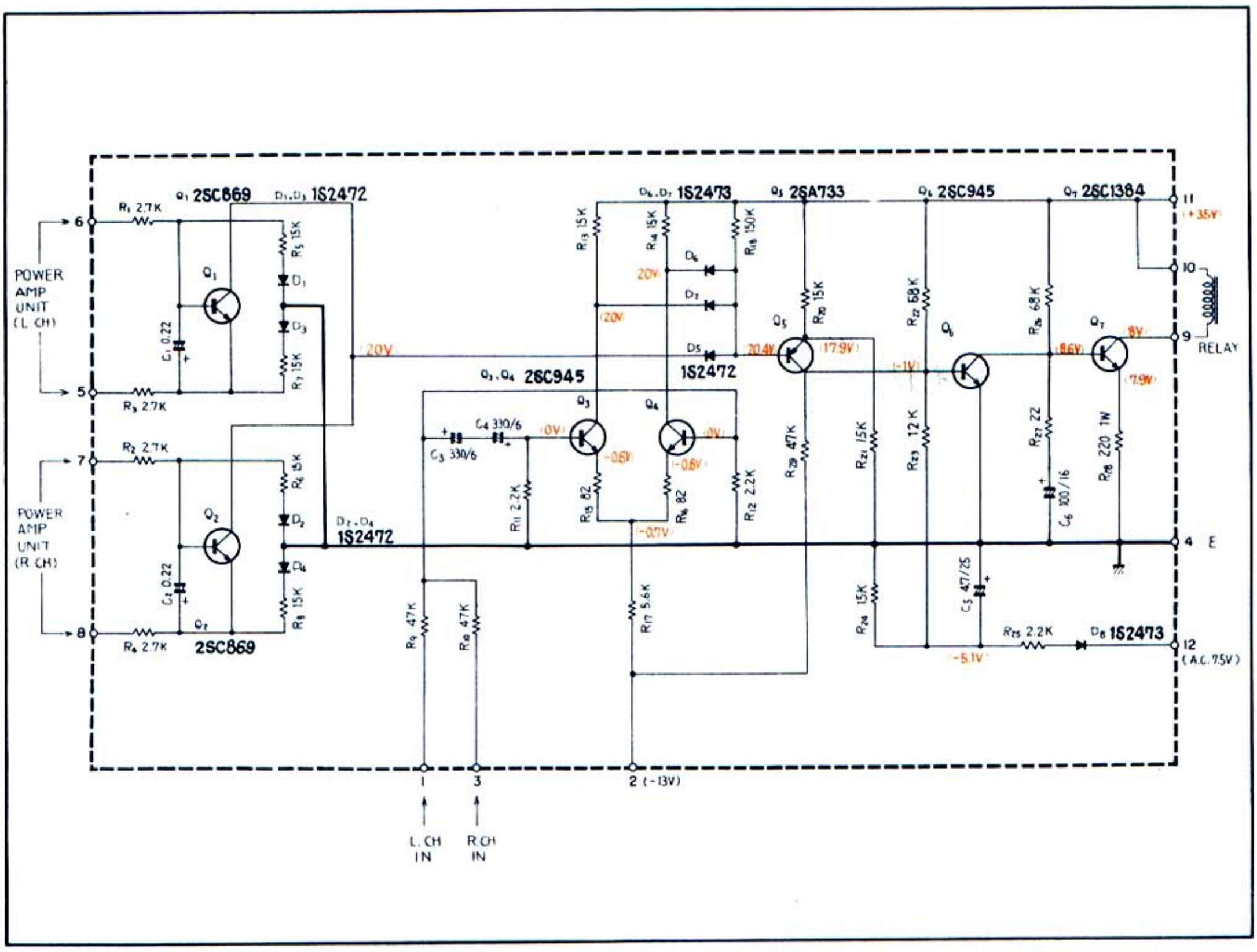

2SC869

2SC857

2SC1515

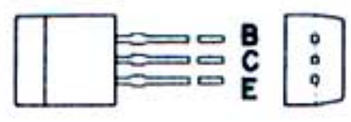

2SC1384

2SC945
2SA733

Foil Side (AWM-025-C)

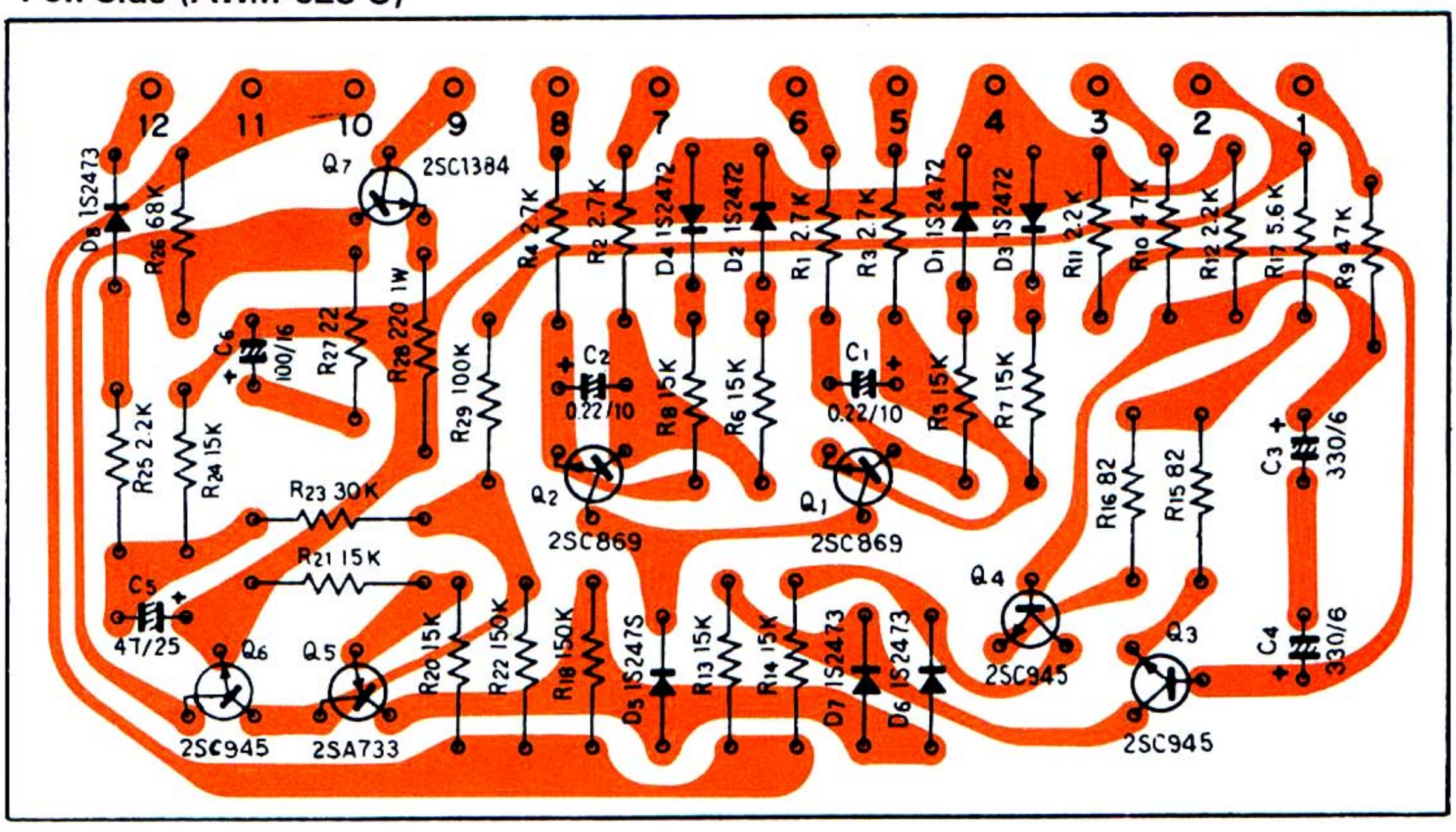

Parts List of Protection Circuit Assembly (AWM-025-C)

CAPACITORS

Symbol	Description			Part No.	
C1	Electrolytic	0.22	10V	CSSA R22M 10	
C2	Electrolytic	0.22	10V	CSSA R22M 10	
C3	Electrolytic	330	6V	CEA 331P 6	
C4	Electrolytic	330	6V	CEA 331P 6	
C5	Electrolytic	4.7	25V	CEA 4R7P 25	
C6	Electrolytic	100	16V	CEA 101P 16	

RESISTORS

Symbol	Description			Part No.	
R1	Carbon film	2.7k		RD¼PS 272J	
R2	Carbon film	2.7k		RD¼PS 272J	
R3	Carbon film	2.7k		RD¼PS 272J	
R4	Carbon film	2.7k		RD¼PS 272J	
R5	Carbon film	15k		RD¼PS 153J	
R6	Carbon film	15k		RD¼PS 153J	
R7	Carbon film	15k		RD¼PS 153J	
R8	Carbon film	15k		RD¼PS 153J	
R9	Carbon film	47k		RD¼PS 473J	
R10	Carbon film	47k		RD¼PS 473J	
R11	Carbon film	2.2k		RD¼PS 222J	
R12	Carbon film	2.2k		RD¼PS 222J	
R13	Carbon film	15k		RD¼PS 153J	
R14	Carbon film	15k		RD¼PS 153J	
R15	Carbon film	82		RD¼PS 820J	
R16	Carbon film	82		RD¼PS 820J	
R17	Carbon film	5.6k		RD¼PS 562J	
R18	Carbon film	150k		RD¼PS 154J	
R19					
R20	Carbon film	15k		RD¼PS 153J	
R21	Carbon film	15k		RD¼PS 153J	
R22	Carbon film	68k		RD¼PS 683J	
R23	Carbon film	12k		RD¼PS 123J	
R24	Carbon film	15k		RD¼PS 153J	
R25	Carbon film	2.2k		RD¼PS 222J	
R26	Carbon film	68k		RD¼PS 683J	
R27	Carbon film	22		RD¼PS 220J	
R28	Metal oxide	220	1W	RS1P 221J	
R29	Carbon film	47k		RD¼PS 473J	

SEMICONDUCTORS

Symbol	Description		Part No.	
Q1	Transistor	2SC869-C, B or D (2SC857K-A) (2SC1515K)		
Q2	Transistor	2SC869-C, B or D (2SC857K-A) (2SC1515K)		
Q3	Transistor	2SC945-Q or R		
Q4	Transistor	2SC945-Q or R		
Q5	Transistor	2SA733-Q or R		
Q6	Transistor	2SC945-Q or R		
Q7	Transistor	2SC1384-R or Q		
D1	Diode	1S2472		
D2	Diode	1S2472		
D3	Diode	1S2472		
D4	Diode	1S2472		
D5	Diode	1S2472		
D6	Diode	1S2473		
D7	Diode	1S2473		
D8	Diode	1S2473		

10.8 POWER SUPPLY CIRCUIT ASSEMBLY (AWR-057-0)

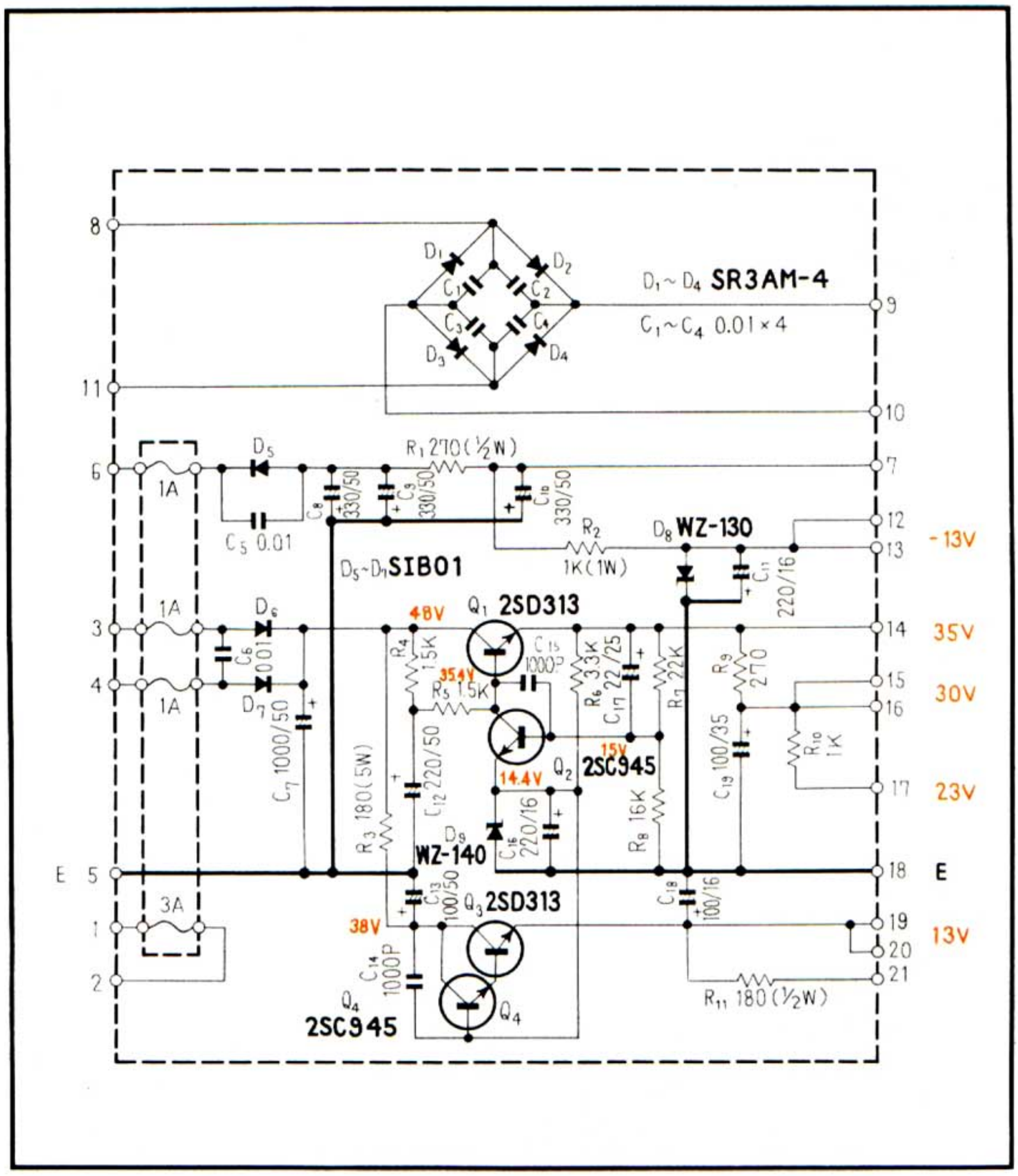

Parts List of Power Supply Circuit Assembly (AWR-057-0)

CAPACITORS

Symbol	Description			Part No.	
C1	Ceramic	0.01	150V	ACG-004-0	
C2	Ceramic	0.01	150V	ACG-004-0	
C3	Ceramic	0.01	150V	ACG-004-0	
C4	Ceramic	0.01	150V	ACG-004-0	
C5	Ceramic	0.01	150V	ACG-004-0	
C6	Ceramic	0.01	150V	ACG-004-0	
C7	Electrolytic	1,000	50V	CEB 102P 50	
C8	Electrolytic	330	50V	CEA 331P 50	
C9	Electrolytic	330	50V	CEA 331P 50	
C10	Electrolytic	330	50V	CEA 331P 50	

Foil Side (AWR-057-0)

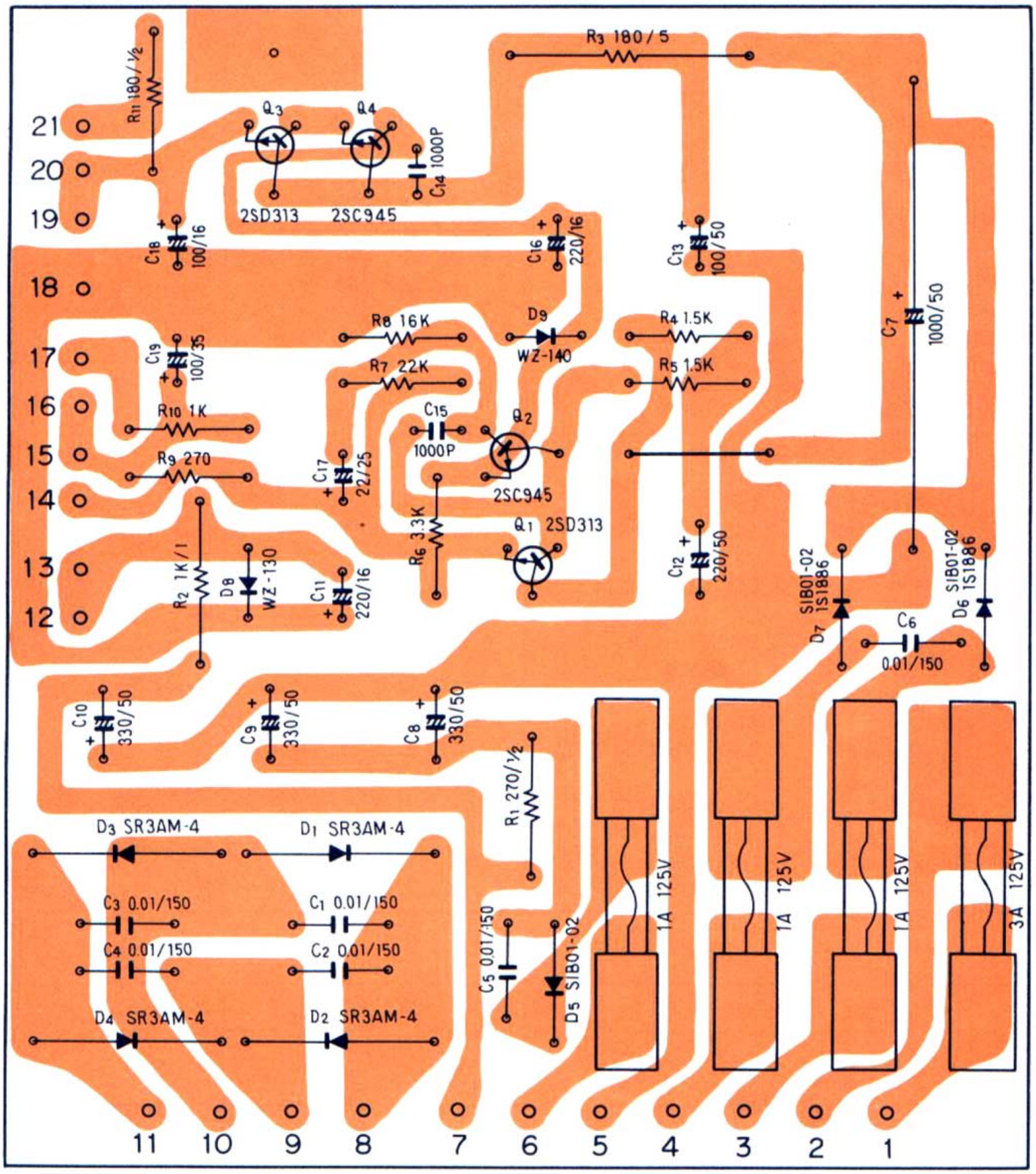

Symbol	Description			Part No.	
C11	Electrolytic	220	16V	CEA 221P 16	
C12	Electrolytic	220	50V	CEA 221P 50	
C13	Electrolytic	100	50V	CEA 101P 50	
•C14	Ceramic	0.001	50V	CDKYF 102Z 50	
C15	Ceramic	0.001	50V	CKDYF 102Z 50	
C16	Electrolytic	220	16V	CEA 221P 16	
C17	Electrolytic	22	25V	CEA 220P 25	
C18	Electrolytic	100	16V	CEA 101P 16	
C19	Electrolytic	100	35V	CEA 101P 35	

Continued on the Next Page

RESISTORS

Symbol	Description			Part No.	
R1	Carbon film	270	½W	RD½PS 271J	
R2	Metal oxide	1k	1W	RS1P 102K	
R3	Wire sound	180	5W	RT5B 181K	
R4	Carbon film	1.5k		RD¼PS 152J	
R5	Carbon film	1.5k		RD¼PS 152J	
R6	Carbon film	3.3k		RD¼PS 332J	
R7	Carbon film	22k		RD¼PS 223J	
R8	Carbon film	16k		RD¼PS 163J	
R9	Carbon film	270		RD¼PS 271J	
R10	Carbon film	1k		RD¼PS 102J	
R11	Carbon film	180	½W	RD¼PS 181J	

SEMICONDUCTORS

Symbol	Description		Part No.	
Q1	Transistor	2SD313-E or D		
Q2	Transistor	2SC945-R or Q		
Q3	Transistor	2SD313-E or D		
Q4	Transistor	2SC945-R or Q		
D1	Diode	SR3AM-4		
D2	Diode	SR3AM-4		
D3	Diode	SR3AM-4		
D4	Diode	SR3AM-4		
D5	Diode	S1B01-02 (1S1886)		
D6	Diode	S1B01-02 (1S1886)		
D7	Diode	S1B01-02 (1S1886)		
D8	Zener diode	WZ-130		
D9	Zener diode	WZ-140		

OTHERS

Symbol	Description	Part No.	
	Heat sink	ANH-117-0	
	Fuse holder (clip-in type)	AKR-013-0	

10.9 POWER SUPPLY CIRCUIT ASSEMBLY (AWR-058-0) FOR GN MODEL

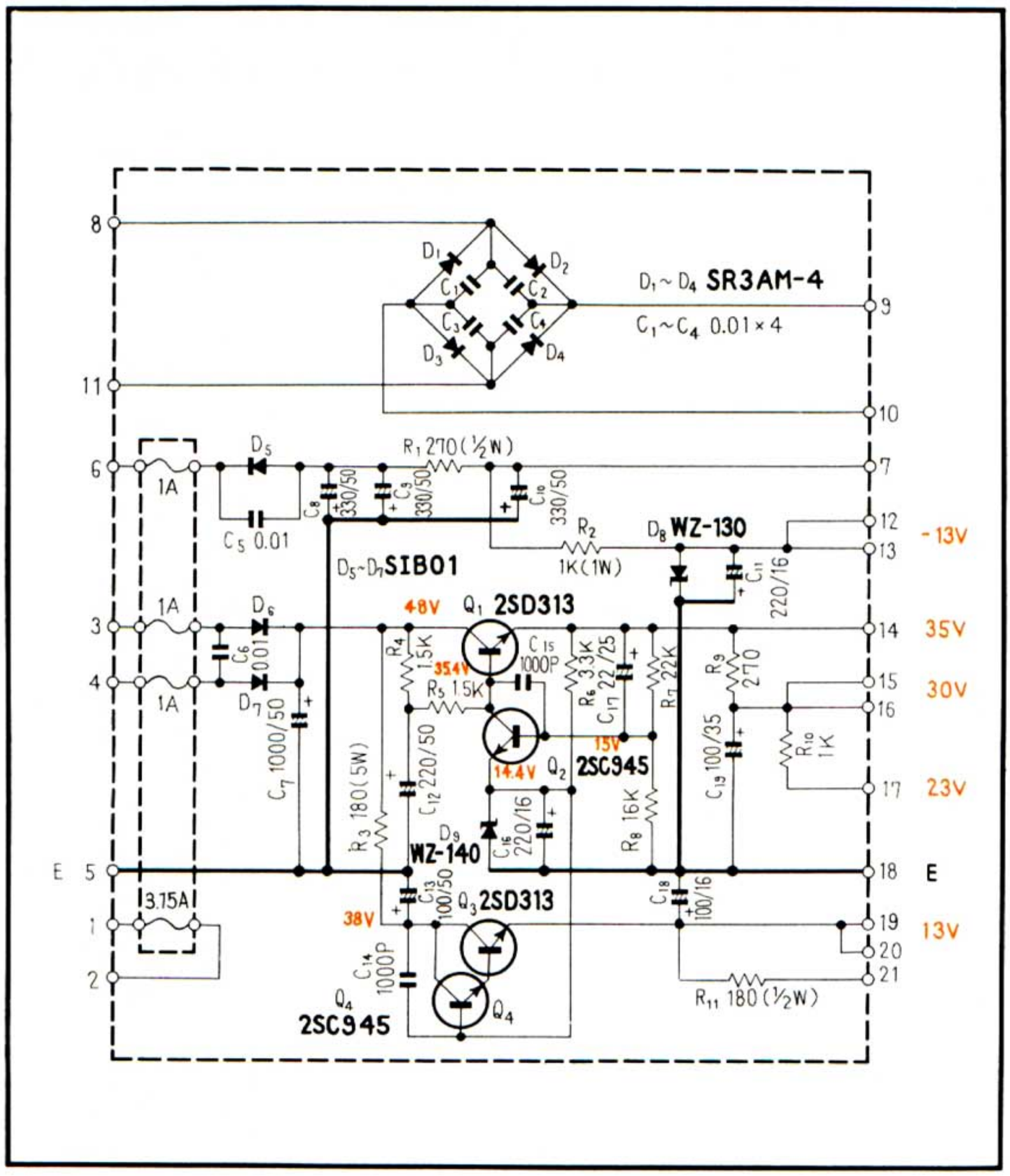

2SD313

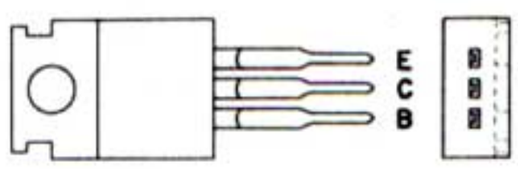

2SC945

Parts List of Power Supply Circuit Assembly (AWR-058-0)

CAPACITORS

Symbol	Description			Part No.	
C1	Ceramic	0.01	150V	ACG-004-0	
C2	Ceramic	0.01	150V	ACG-004-0	
C3	Ceramic	0.01	150V	ACG-004-0	
C4	Ceramic	0.01	150V	ACG-004-0	
C5	Ceramic	0.01	150V	ACG-004-0	
C6	Ceramic	0.01	150V	ACG-004-0	
C7	Electrolytic	1,000	50V	CEB 102P 50	
C8	Electrolytic	330	50V	CEA 331P 50	
C9	Electrolytic	330	50V	CEA 331P 50	
C10	Electrolytic	330	50V	CEA 331P 50	

Foil Side (AWR-058-0)

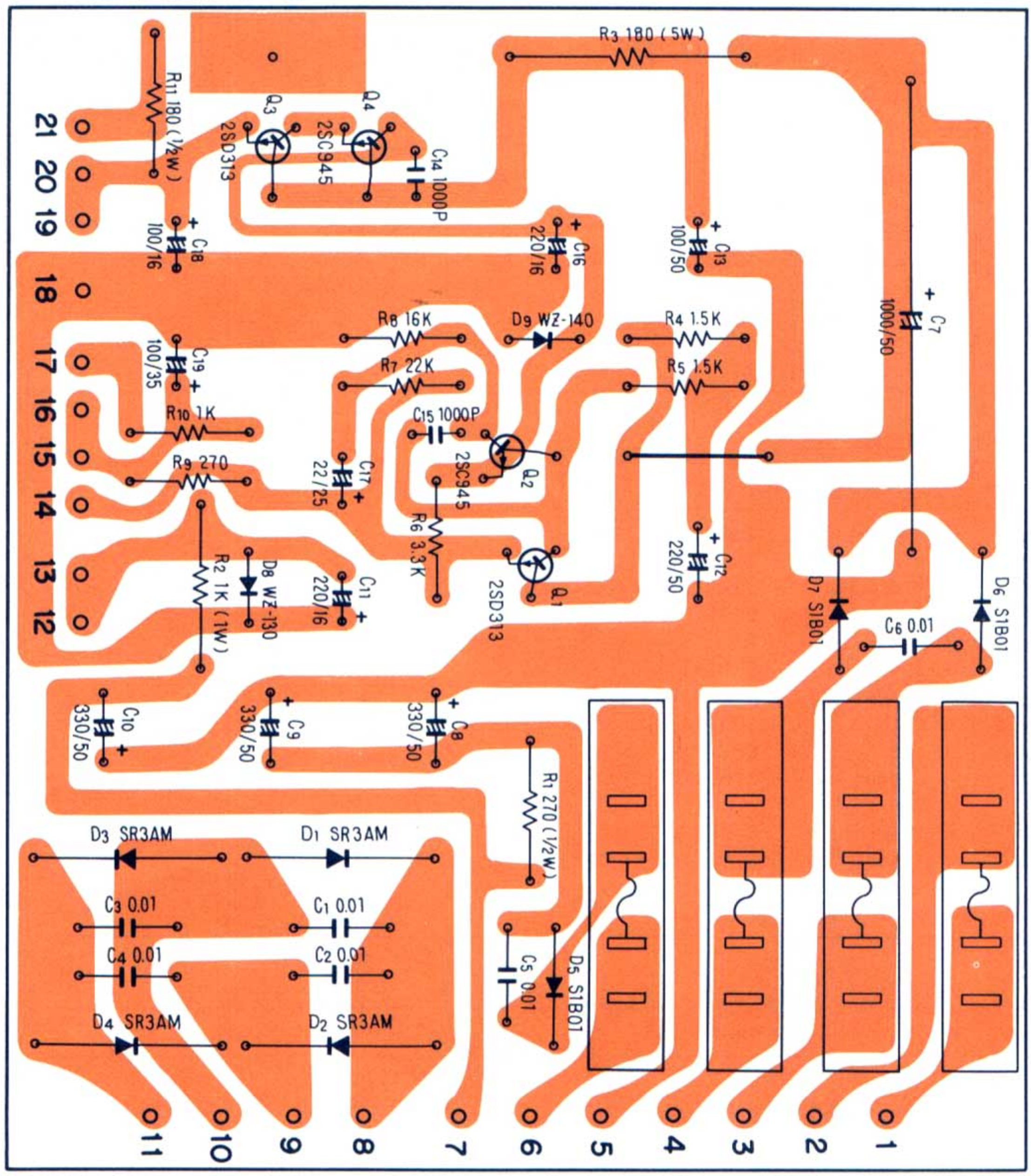

Symbol	Description			Part No.	
C11	Electrolytic	220	16V	CEA 221P 16	
C12	Electrolytic	220	50V	CEA 221P 50	
C13	Electrolytic	100	50V	CEA 101P 50	
C14	Ceramic	0.001	50V	CKDYF 102Z 50	
C15	Ceramic	0.001	50V	CKDYF 102Z 50	
C16	Electrolytic	220	16V	CEA 221P 16	
C17	Electrolytic	22	25V	CEA 220P 25	
C18	Electrolytic	100	16V	CEA 101P 16	
C19	Electrolytic	100	35V	CEA 101P 35	

Continued on the Next Page

RESISTORS

Symbol	Description			Part No.	
R1	Carbon film	270	½W	RD½PS 271J	
R2	Metal oxide	1k	1W	RS1P 102K	
R3	Wire wound	180	5W	RT5B 181K	
R4	Carbon film	1.5k		RD¼PS 152J	
R5					
R6	Carbon film	3.3k		RD¼PS 332J	
R7	Carbon film	22k		RD¼PS 223J	
R8	Carbon film	16k		RD¼PS 163J	
R9	Carbon film	270		RD¼PS 271J	
R10	Carbon film	1k		RD¼PS 102J	
R11	Carbon film	180	½W	RD½PS 181J	

SEMICONDUCTORS

Symbol	Description		Part No.	
Q1	Transistor	2SD313-E or D		
Q2	Transistor	2SC945-R or Q		
Q3	Transistor	2SD313-E or D		
Q4	Transistor	2SC945-R or Q		
D1	Diode	SR3AM-4		
D2	Diode	SR3AM-4		
D3	Diode	SR3AM-4		
D4	Diode	SR3AM-4		
D5	Diode	S1B01-02		
D6	Diode	S1B01-02		
D7	Diode	S1B01-02		
D8	Zener diode	WZ-130		
D9	Zener diode	WZ-140		

OTHERS

Symbol	Description	Part No.	
	Heat sink	ANH-117-0	
	Fuse holder (clip-in type)	AKR-010-0	

10.10 SWITCH & VOLUME CIRCUIT ASSEMBLY (AWX-071-0)

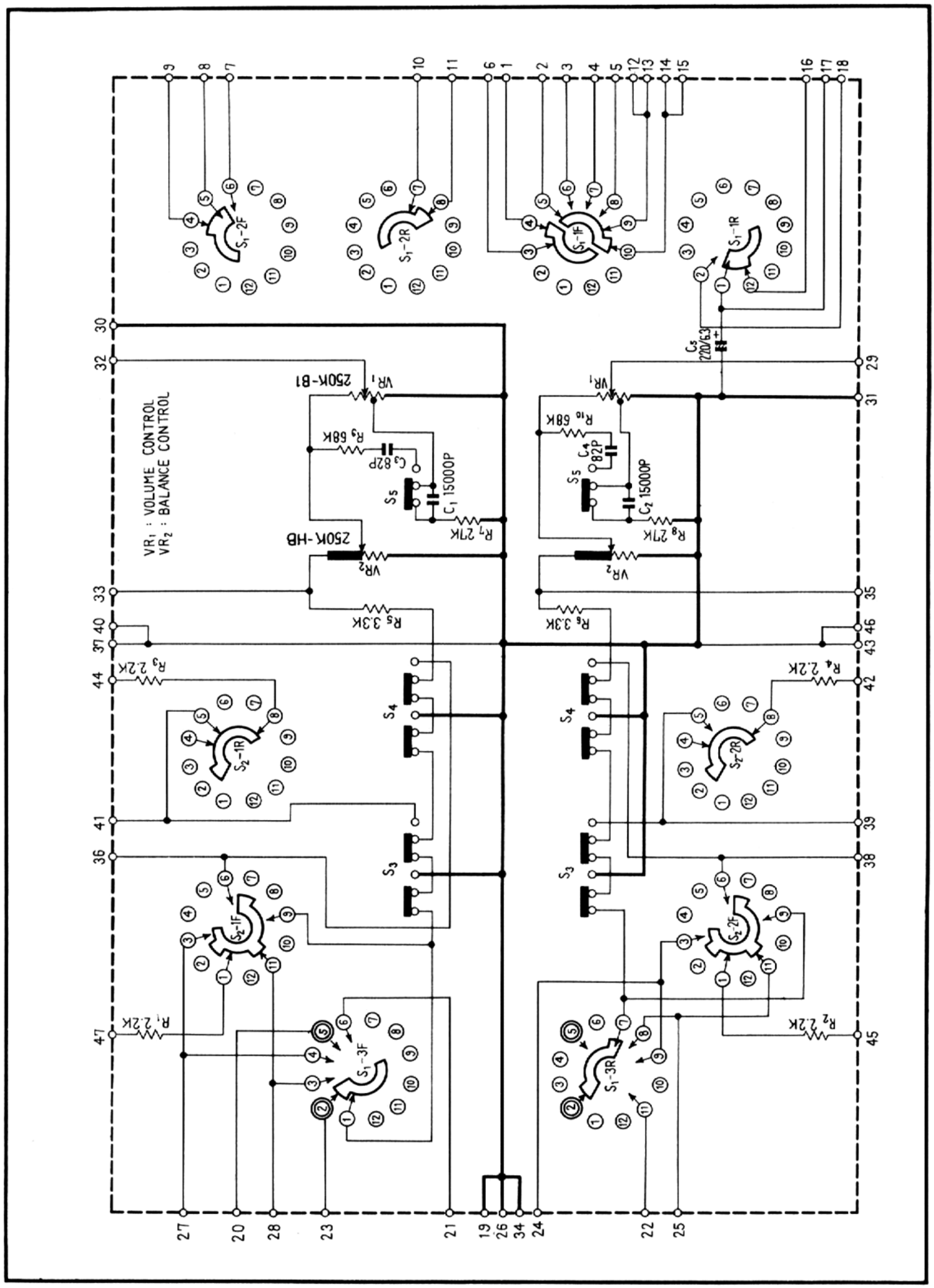

Foil Side (AWX-071-0)

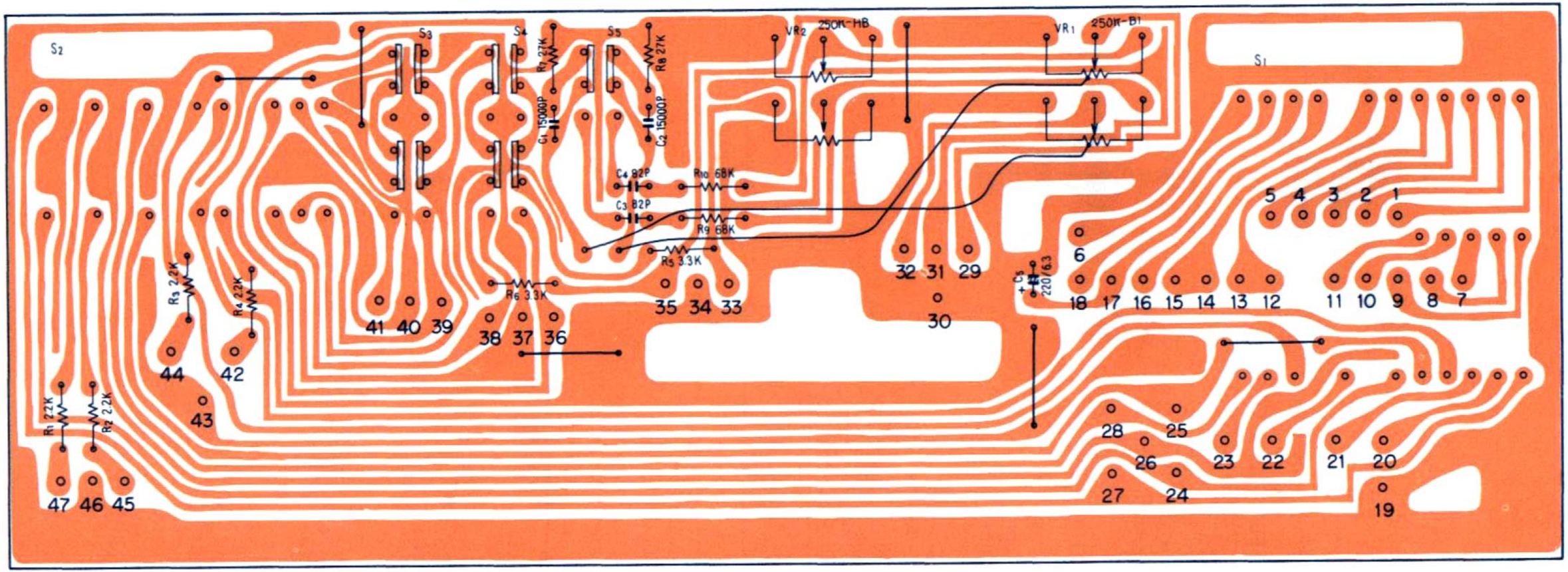

Parts List of Switch & Volume Circuit Assembly (AWX-071-0)

CAPACITORS

Symbol	Description			Part No.	
C1	Mylar	0.015	50V	CQMA 153J 50	
C2	Mylar	0.015	50V	CQMA 153J 50	
C3	Ceramic	82p	50V	CCDSL 820K 50	
C4	Ceramic	82p	50V	CCDSL 820K 50	
C5	Electrolytic	220	6V	CEA 221P 6	

RESISTORS AND POTENTIOMETERS

Symbol	Description		Part No.	
VR1	Variable resistor	250k-B1 (volume)	ACV-134-0	
VR2	Variable resistor	250k-HB (balance)	ACV-135-0	
R1	Carbon film	2.2k	RD¼PM 222J	
R2	Carbon film	2.2k	RD¼PM 222J	
R3	Carbon film	2.2k	RD¼PM 222J	
R4	Carbon film	2.2k	RD¼PM 222J	
R5	Carbon film	3.3k	RD¼PM 332J	
R6	Carbon film	3.3k	RD¼PM 332J	
R7	Carbon film	27k	RD¼PM 273J	
R8	Carbon film	27k	RD¼PM 273J	
R9	Carbon film	68k	RD¼PM 683J	
R10	Carbon film	68k	RD¼PM 683J	

SWITCHES

Symbol	Description	Part No.	
S1	Rotary switch (function)	ASD-018-0	
S2	Rotary switch (rec selector)	ASD-017-0	
S3	Lever switch (tape monitor-1)	ASK-028-A	
S4	Lever switch (tape monitor-2)	ASK-028-A	
S5	Lever switch (loudness)	ASK-062-0	

10.11 SPEAKER SWITCH CIRCUIT ASSEMBLY (AWS-076-0)

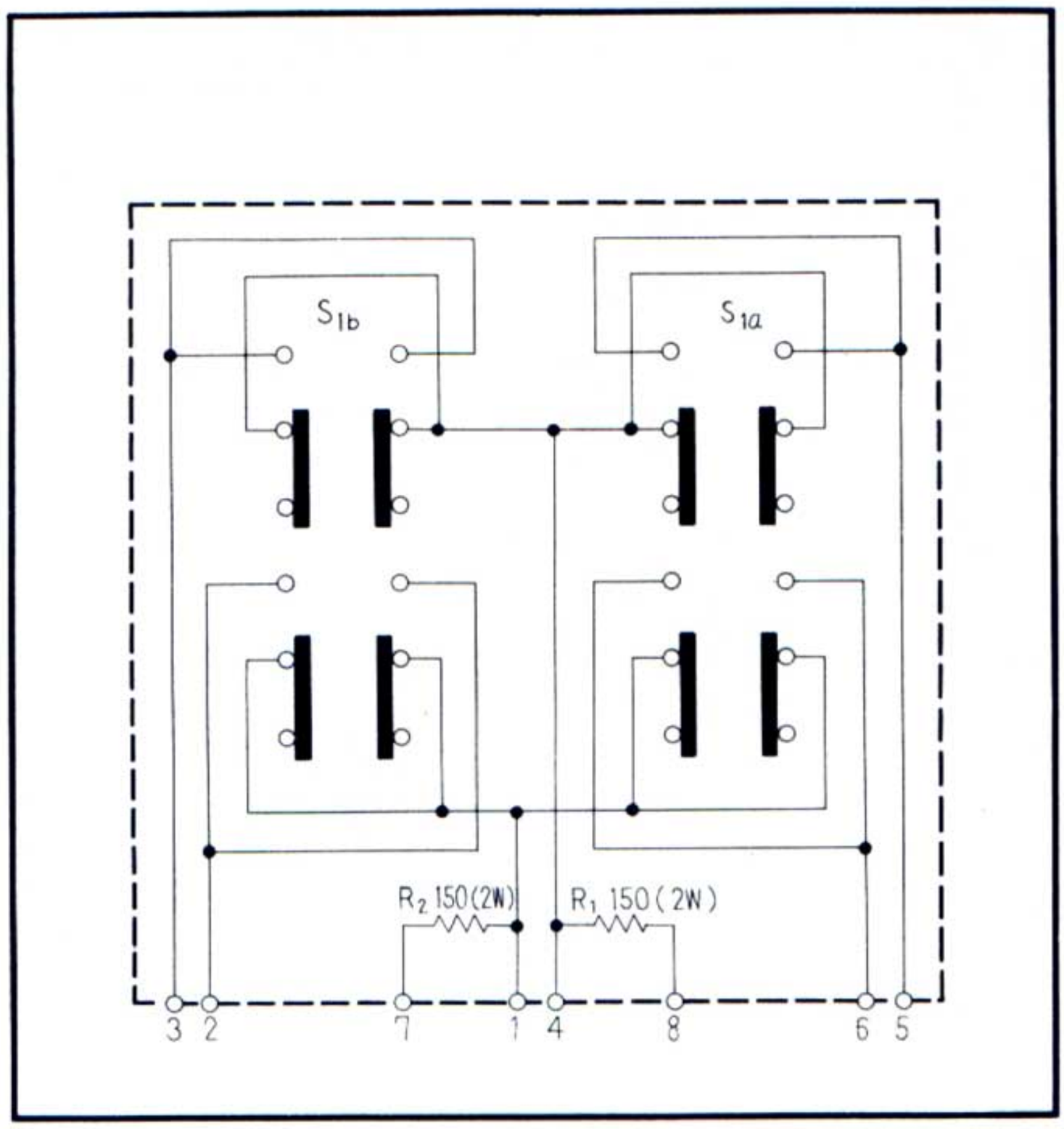

Foil Side (AWS-076-0)

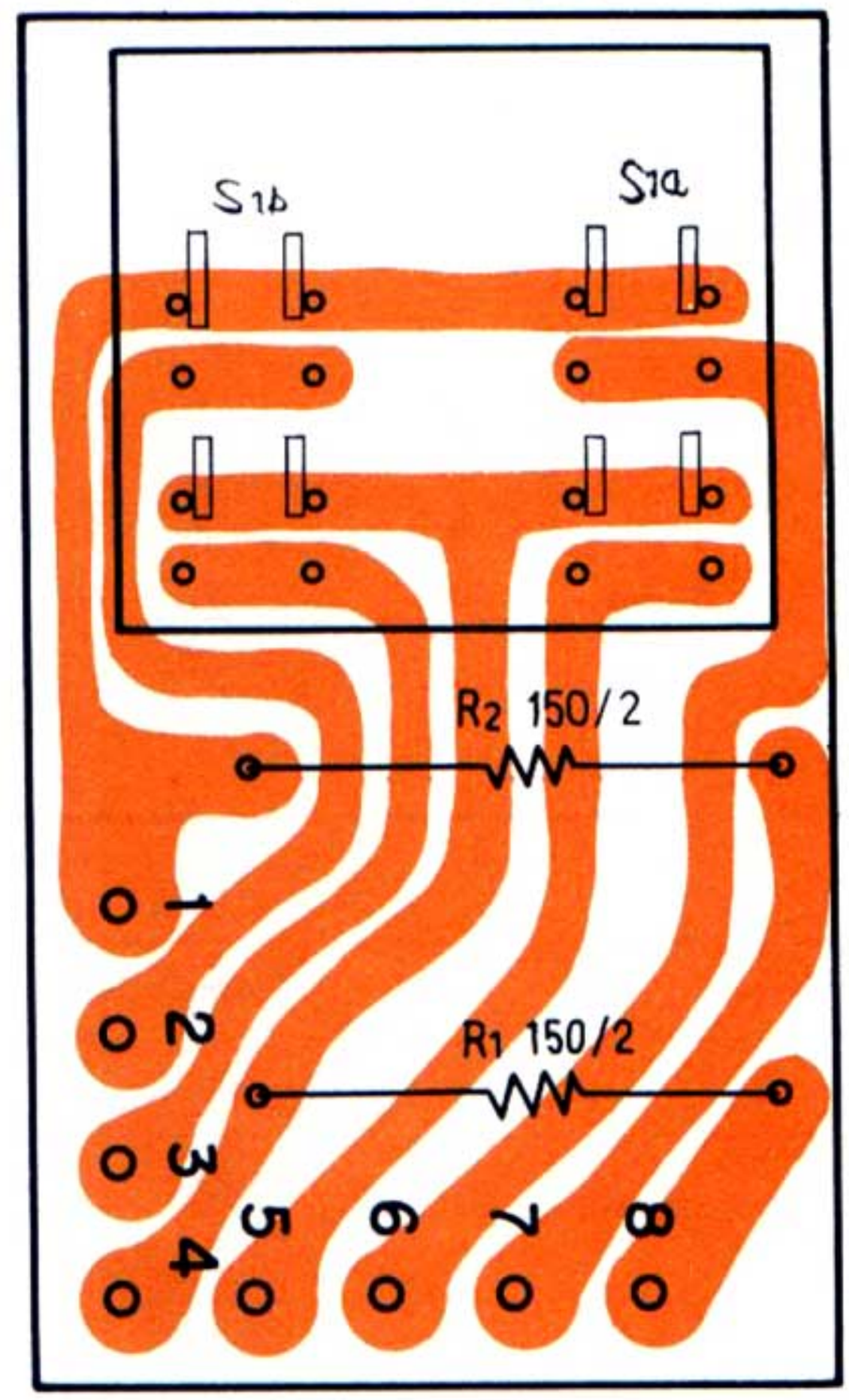

RESISTORS

Symbol	Description	Part No.	
R1	Metal oxide 150 2W	RS2R 151K	
R2	Metal oxide 150 2W	RS2R 151K	

SWITCH

Symbol	Description	Part No.	
S1	Push switch (speakers)	ASG-072-0	

10.12 PUSH SWITCH CIRCUIT ASSEMBLY (AWS-077-0)

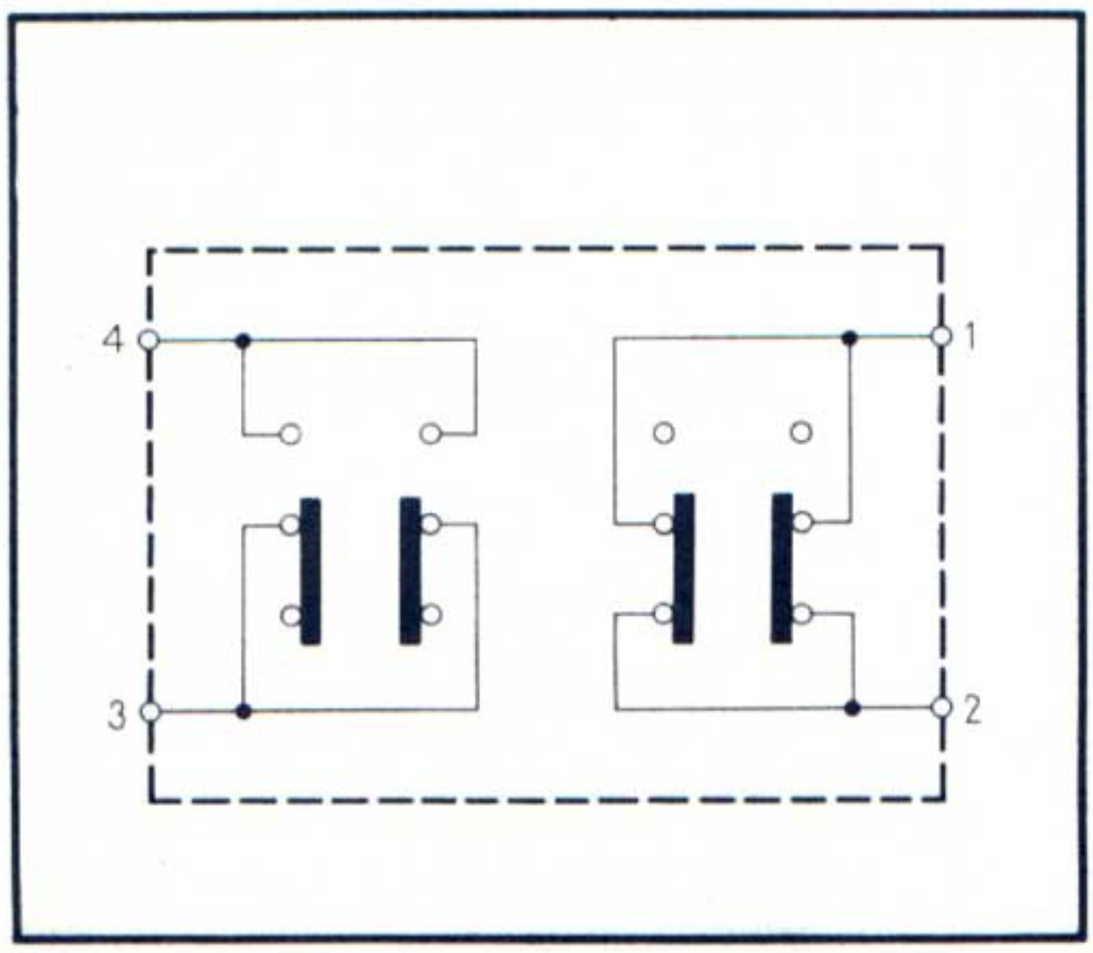

Foil Side (AWS-077-0)

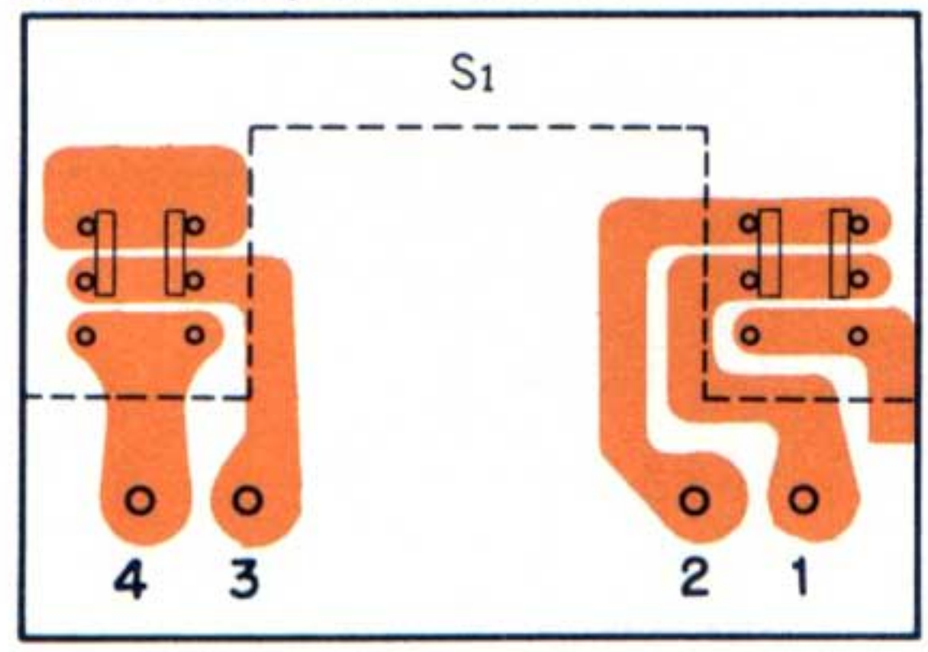

Symbol	Description	Part No.	
S1	Push switch (mode, FM muting)	ASG-071-0	

10.13 5P CONNECTOR ASSEMBLY (AWX-062-0)

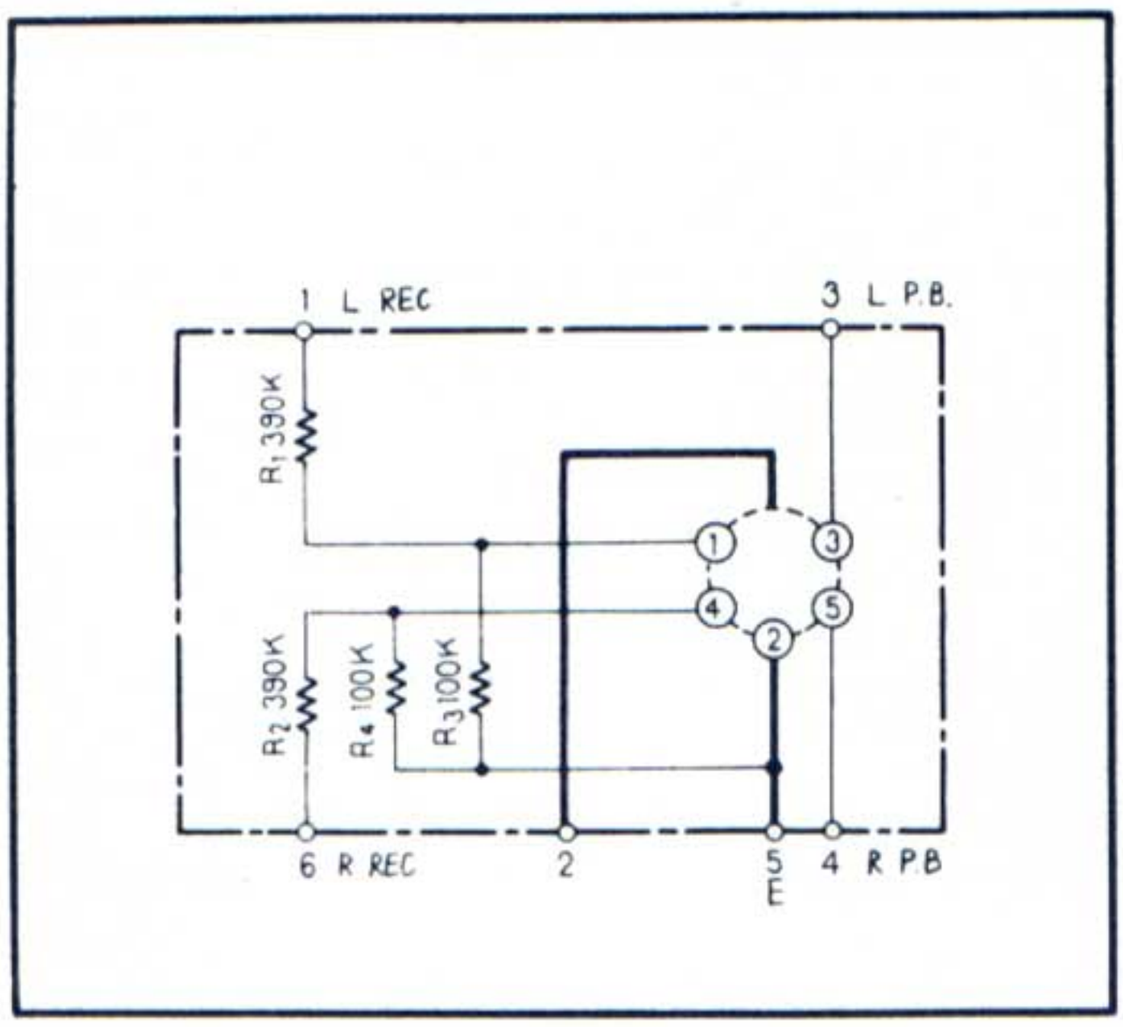

Foil Side (AWX-062-0)

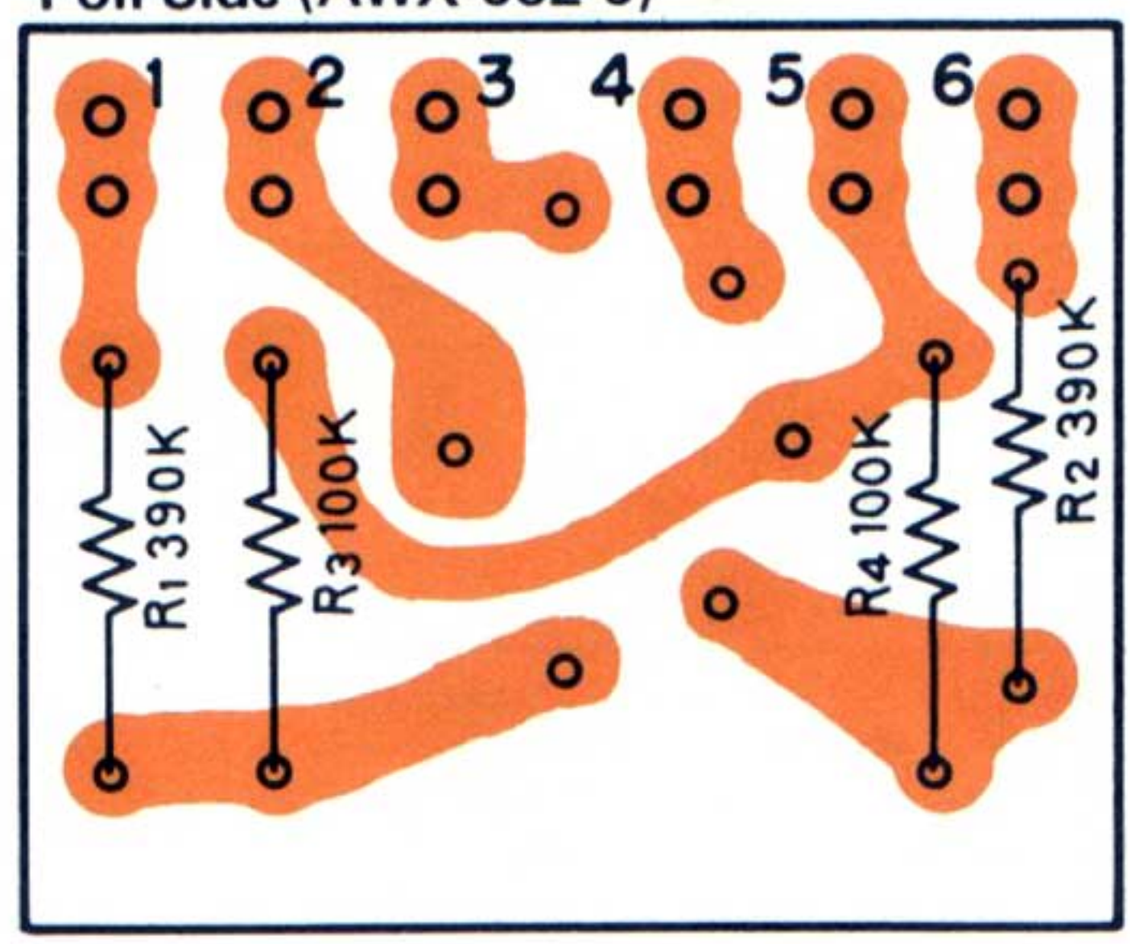

RESISTORS

Symbol	Description	Part No.	
R1	Carbon film 390k	RD¼PS 394J	
R2	Carbon film 390k	RD¼PS 394J	
R3	Carbon film 100k	RD¼PS 104J	
R4	Carbon film 100k	RD¼PS 104J	
	Connector (DIN type 5P)	AKP-007-0	
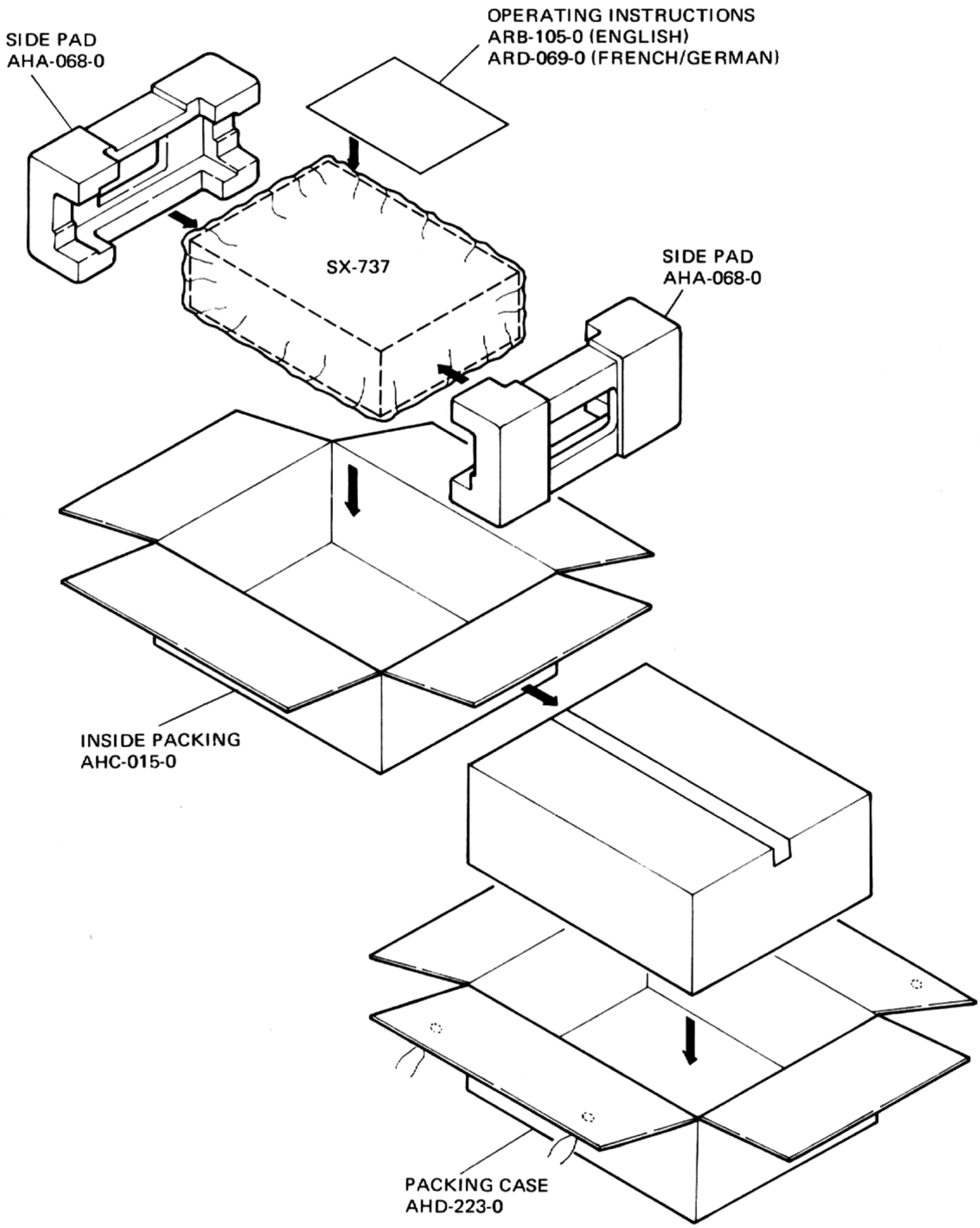
11. PACKING METHOD AND PARTS NUMBERS