PIONEER®

AUDIO UNIT

W15-073

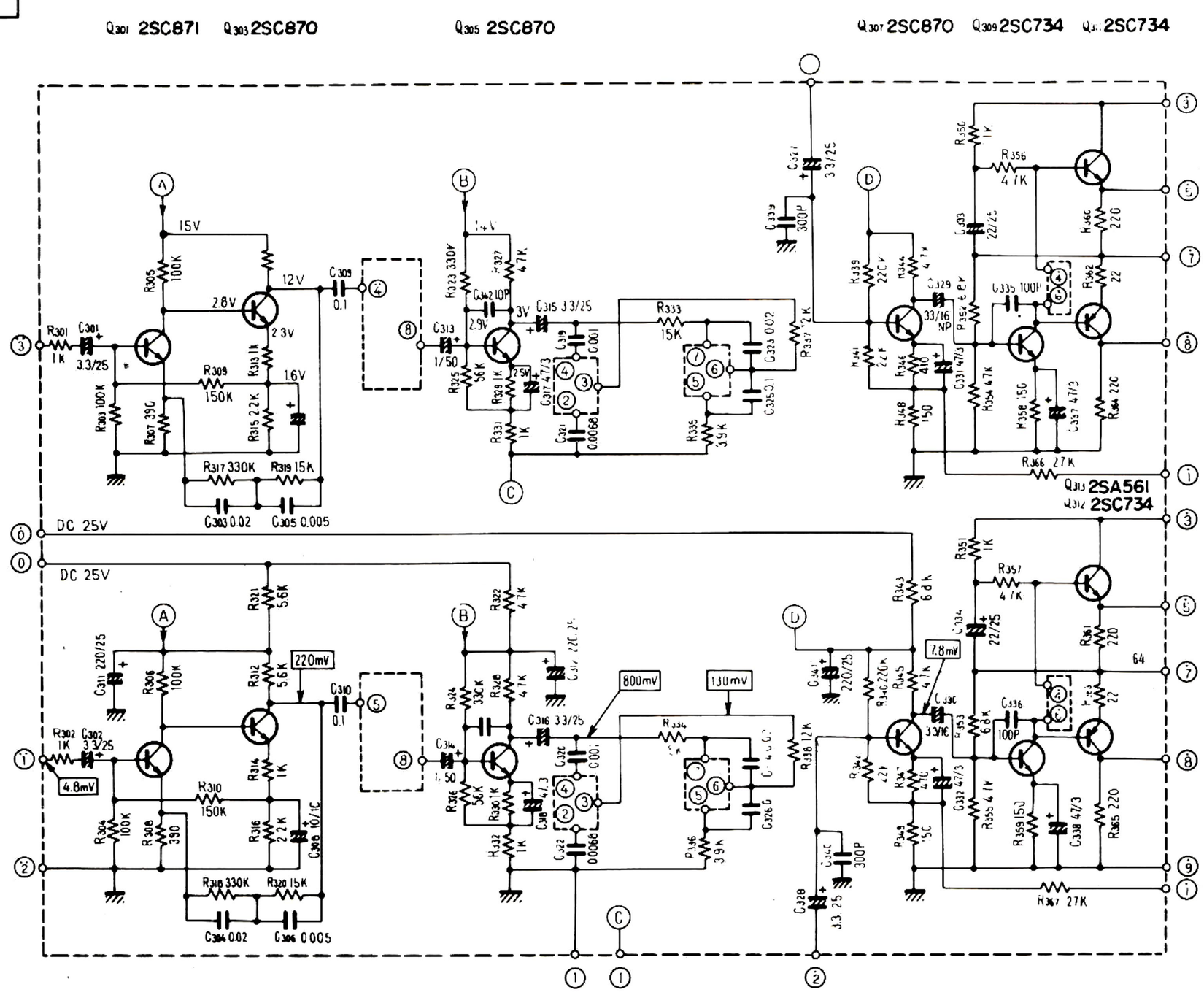

POWER SUPPLY UNIT

W16-021

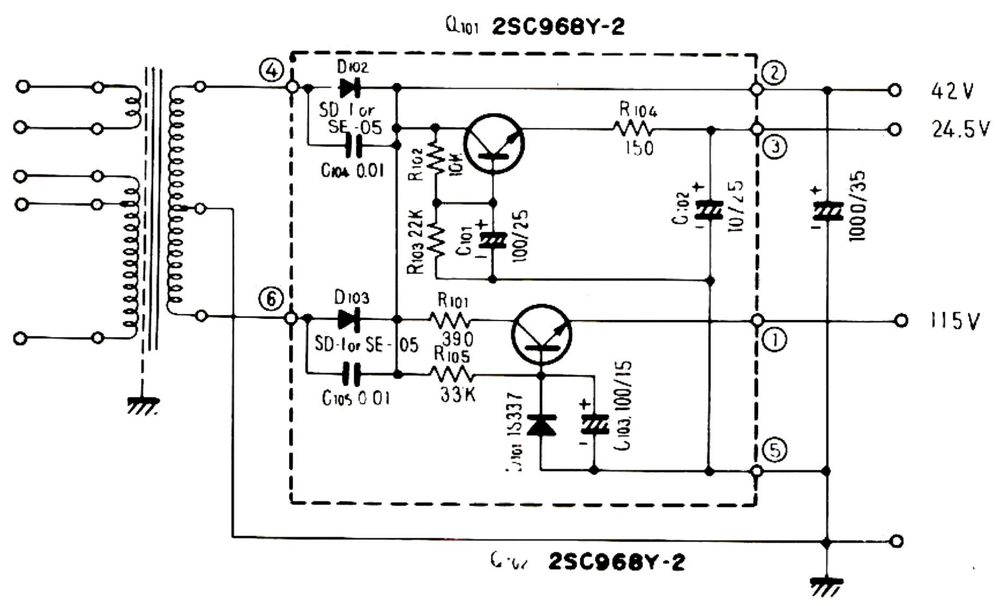

SCHEMATIC CIRCUIT DIAGRAMS

MODEL

SX-440®

SX-440®

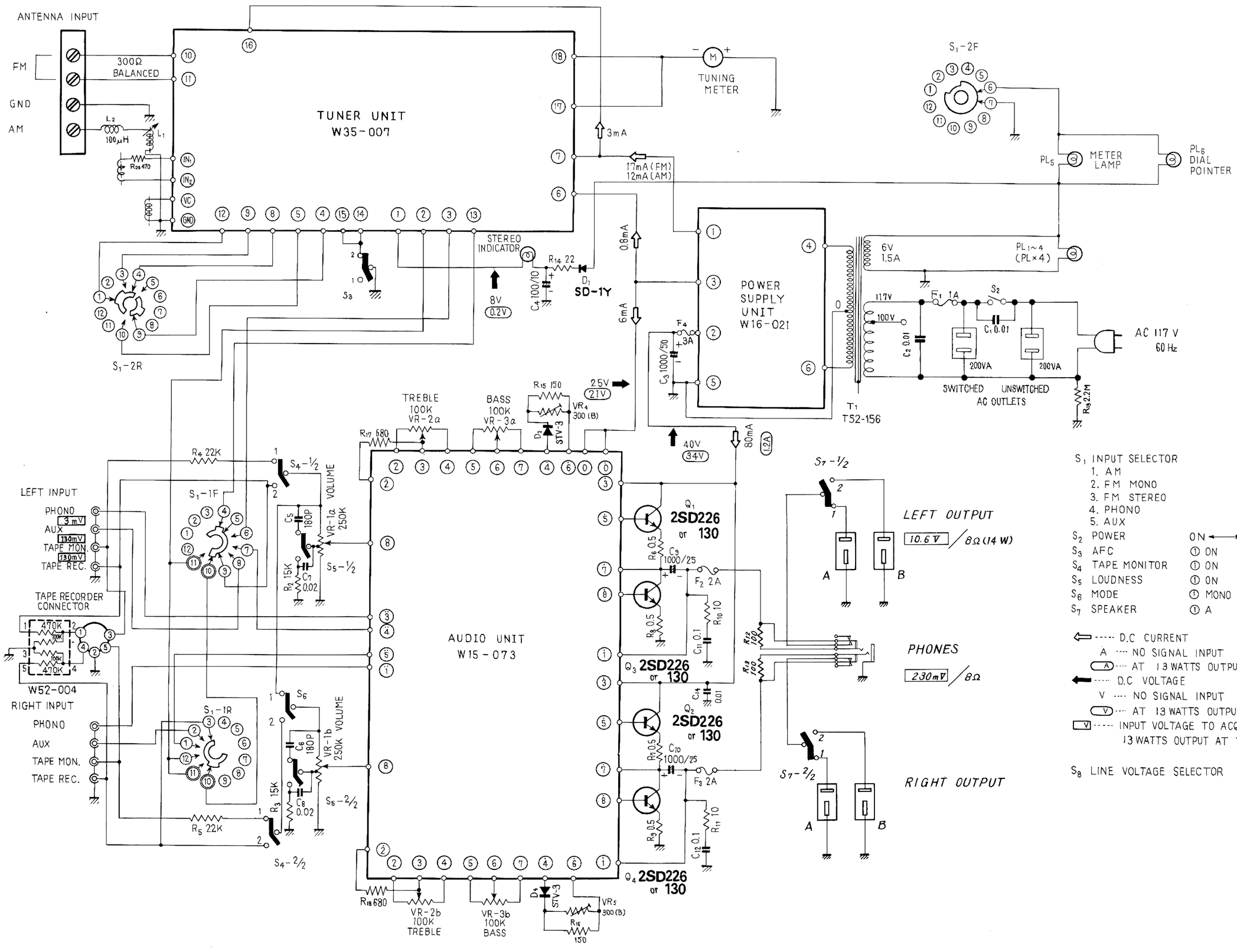

S_1 INPUT SELECTOR
1. AM
2. FM MONO
3. FM STEREO
4. PHONO
5. AUX

S_2	POWER	ON ⟷ OFF	
S_3	AFC	① ON	② OFF
S_4	TAPE MONITOR	① ON	② OFF
S_5	LOUDNESS	① ON	② OFF
S_6	MODE	① MONO	② STEREO
S_7	SPEAKER	① A	② B

⇦ ---- D.C CURRENT
A ---- NO SIGNAL INPUT
(A) ---- AT 13 WATTS OUTPUT
⬅ ---- D.C VOLTAGE
V ---- NO SIGNAL INPUT
(V) ---- AT 13 WATTS OUTPUT
[V] ---- INPUT VOLTAGE TO ACQUIRED 13 WATTS OUTPUT AT 1KHz (R.M.S)

S_8 LINE VOLTAGE SELECTOR

TUNER UNIT
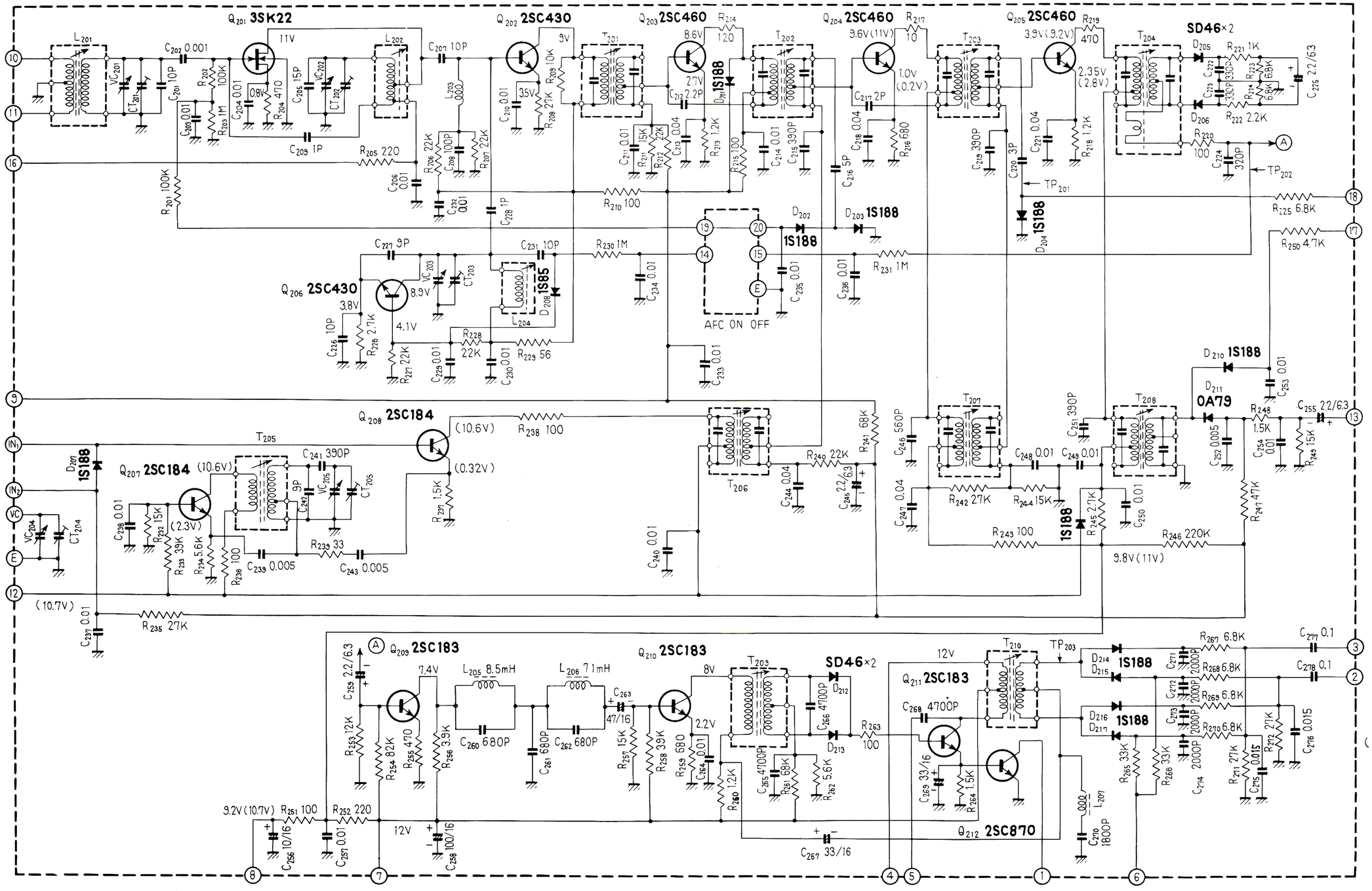
W35-007