7070

GENERAL INFORMATION
SCHEMATIC DIAGRAM
PARTS LIST
ALIGNMENT MANUAL

NIKKO

am-fm-multiplex stereo receiver model sta- **7070**

NIKKO ELECTRIC MFG. CO., LTD. 4-1, 3-CHOME, TAMAGAWA OKUSAWA-CHO, SETAGAYA-KU, TOKYO, JAPAN.

NIKKO ELECTRIC CORPORATION OF AMERICA 5001 LANKERSHIM BLUD., NORTH HOLLYWOOD, CALIF. 91601

www.hifiengine.com

CONTENTS

PAGE

1. SPECIFICATION 3

2. DIAGRAMS

2.1 DISASSEMBLY DETAILS 4
2.2 COMPONENT LAYOUT 5
2.3 SCHEMATIC DIAGRAM, OVERALL 6
2.4 BLOCK DIAGRAM 7
2.5 TUNER ASSEMBLY 8
2.6 MAIN AMP. ASSEMBLY 10
2.7 PRE AMP–REG ASSEMBLY 11

3. TRANSISTOR SPECIFICATIONS

3.1 INTEGRATED CIRCUITS 13
3.2 TRANSISTORS & DIODES 14

4. ALIGNMENT PROCEDURE

4.1 TUNER ALIGNMENT 15
4.2 AMPLIFIER SECTION ALIGNMENT 16
4.3 DIAL STRING PROCEDURE 16

www.hifiengine.com

1. SPECIFICATIONS

1.1 STANDARD SPECIFICATION (STA7070)

1. FM TUNER SECTION

	NOMINAL	LIMIT
Sensitivity (IHF)	2μV	3μV
Image rejection 98MHz	80dB	65dB
IF rejection 98MHz	90dB	80dB
Selectivity ±400kHz	60dB	45dB
M.P.X. separation 1000Hz	38dB	30dB
Muting sensitivity	10μV	50μV
Harmonic distortion MONO	0.3%	0.5%
4 CH. Tuner output	180mV	±2dB
Output voltage (TAPE OUT) 500μV, 100%	800mV	±2dB
Meter indication 500μV	4.0	3.5

2. AM TUNER SECTION

Sensitivity (S/N = 20dB)	150μV/m	560μV/m
Image rejection 1MHz	45dB	35dB
IF rejection 1MHz	40dB	30dB
Selectivity ±10kHz	25dB	20dB

3. AMPLIFIER SECTION

Input sensitivity (at 1000Hz)	PHONO 1, 2	2.2mV	±3dB
	AUX 1.	160mV	±3dB
	AUX 2.	320mV	±3dB
	TAPE MON. 1, 2.	160mV	±3dB
	MAIN IN	1000mV	±3dB
S/N	PHONO	70dB	60dB
	Other	80dB	75dB
Output (8 ohm, 0.5% T.H.D.)	single ch. driver	40W	36W
	both ch. driven	34W	30W
Distortion at 1W		0.1%	0.3%
Frequency response		20Hz ~ 30kHz	±2dB
Equalizer		70Hz & 10kHz	±2dB
Tone & filter & loundness		70Hz & 10kHz	±3dB

www.hifiengine.com

2. DIAGRAMS

2.1 DISASSEMBLY DETAILS

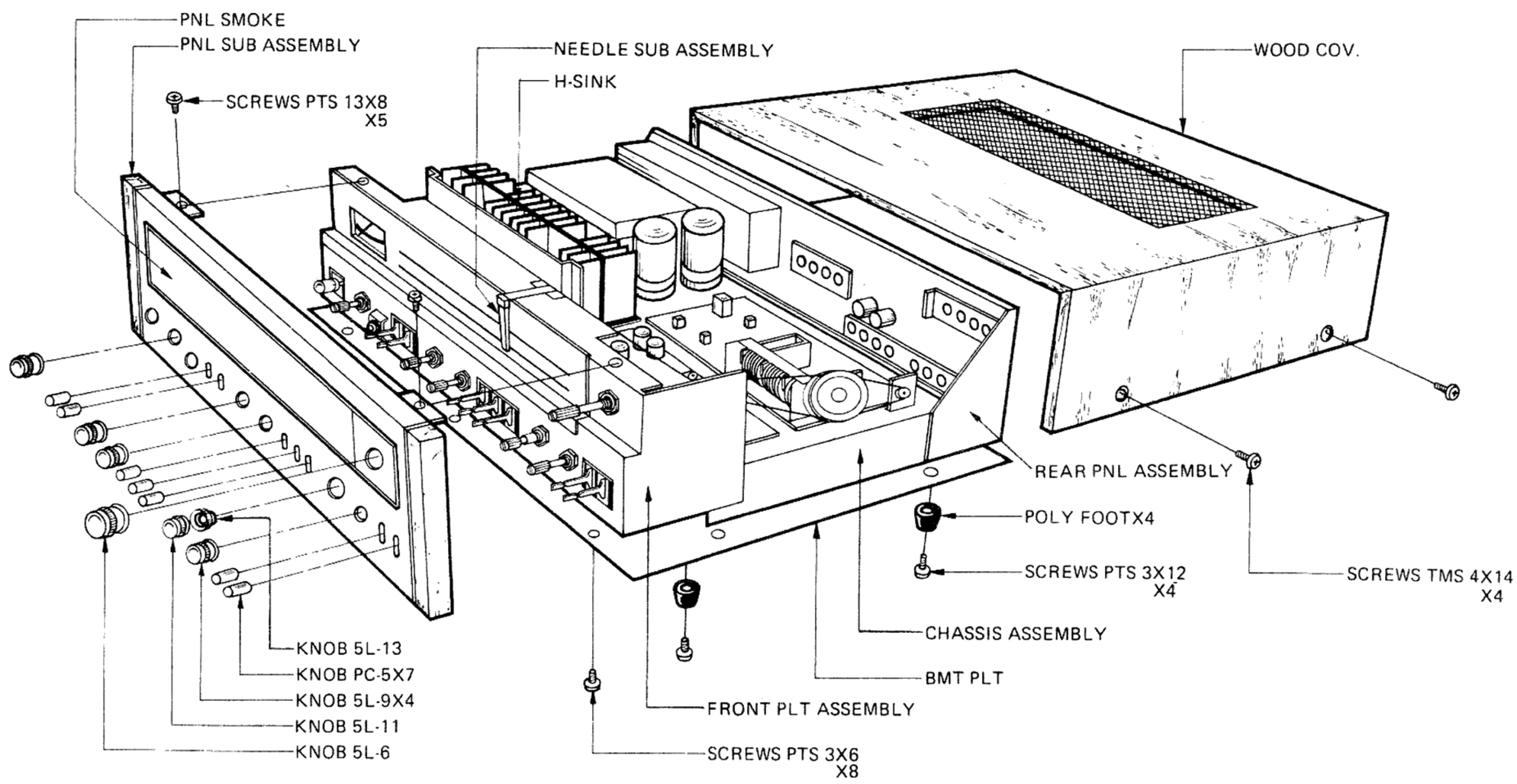

FINAL ASSEMBLY

Parts No.	Description	Symbol	Parts No.	Description	Symbol
982378 O	CTN BOX		790289 O	POLY FOOT	
982380 O	CTN PAD		783071 O	WOOD COV	
963325 O	CTN LABEL		788241 O	PNL S. ASS	
984041 O	STYROL PAD		787016 O	PNL SMOKE	
984042 O	STYROL PAD		785048 O	KNOB 5L-6	TUNING
960097 E	OWNS MANUAL		785051 O	KNOB 5L-9	TONE & SP-SW & SELECTOR
961075 E	DIAGRAM		785053 O	KNOB 5L-11	VOLUME
458076 O	FM ANT (EX)		785055 O	KNOB 5L-13	BALANCE
444012 O	PIN PLUG				
969001 O	SILICA GEL				
785030 O	KNOB PC-5	LEVER-SW			
732197 O	BTM PLT				

FRONT PLT ASSEMBLY

Parts No.	Description	Symbol	Parts No.	Description	Symbol
740056 O	REFLEX CASE		405070 O	ROTARY SW SR26N 5-10-6	S1
467002 O	LAMP PCB ASS		225102 K	M-CAP 0.001MF	C8, 9
311470 K	RES 47 OHM 1/4P	R58	225223 K	M-CAP 0.022MF	C14, 15
580806 O	PL-8 8V 0.3A	Z2, 3, 4, 5, 6, 7, 8	225333 K	M-CAP 0.033MF	C12, 13
580807 O	PL-8 8V 40MA	Z1	225473 K	M-CAP 0.047MF	C10, 11
715189 O	DIAL SHAFT S. ASS		225104 K	M-CAP 0.1MF	C6, 7
749016 O	FLY WHEEL 52ϕ		235331 J	S-CAP 330PF	C4, 5
785058 O	PUSH BUTTON OL-2	POWER	248103 Z	C-CAP 0.01MF 1.4KV	C20
780149 O	DIAL SCL		373331 K	M-RES 330 OHM 1W	R56, 57
404033 O	PUSH SW TV-4	S10	311332 J	RES 3.3K OHM 1/4P	R19, 20
458115 O	METER A-49	M1	311472 J	RES 4.7K OHM 1/4P	R38, 39, 26, 27
405039 O	ROTARY SW SR26N 1-2-4	S11	311103 J	RES 10K OHM 1/4P	R30, 31, 32, 33, R42, 43, 22, 23
455009 O	EAR JACK 3P(US)				
402039 O	LV SLD SW SSC02250	S2, 3, 4, 5, 6, 8, 9	311153 J	RES 15K OHM 1/4P	R24, 25
432037 O	VR GJ10E 100KBX2	R34, 35, 36, 37	311104 K	RES 100K OHM 1/4P	R44, 45
434006 O	VR FJ20E 100KAX2 100KW	R28, 29, 21	311474 J	RES 470K OHM 1/4P	R40, 41

www.hifiengine.com

2.2 COMPONENT LAYOUT

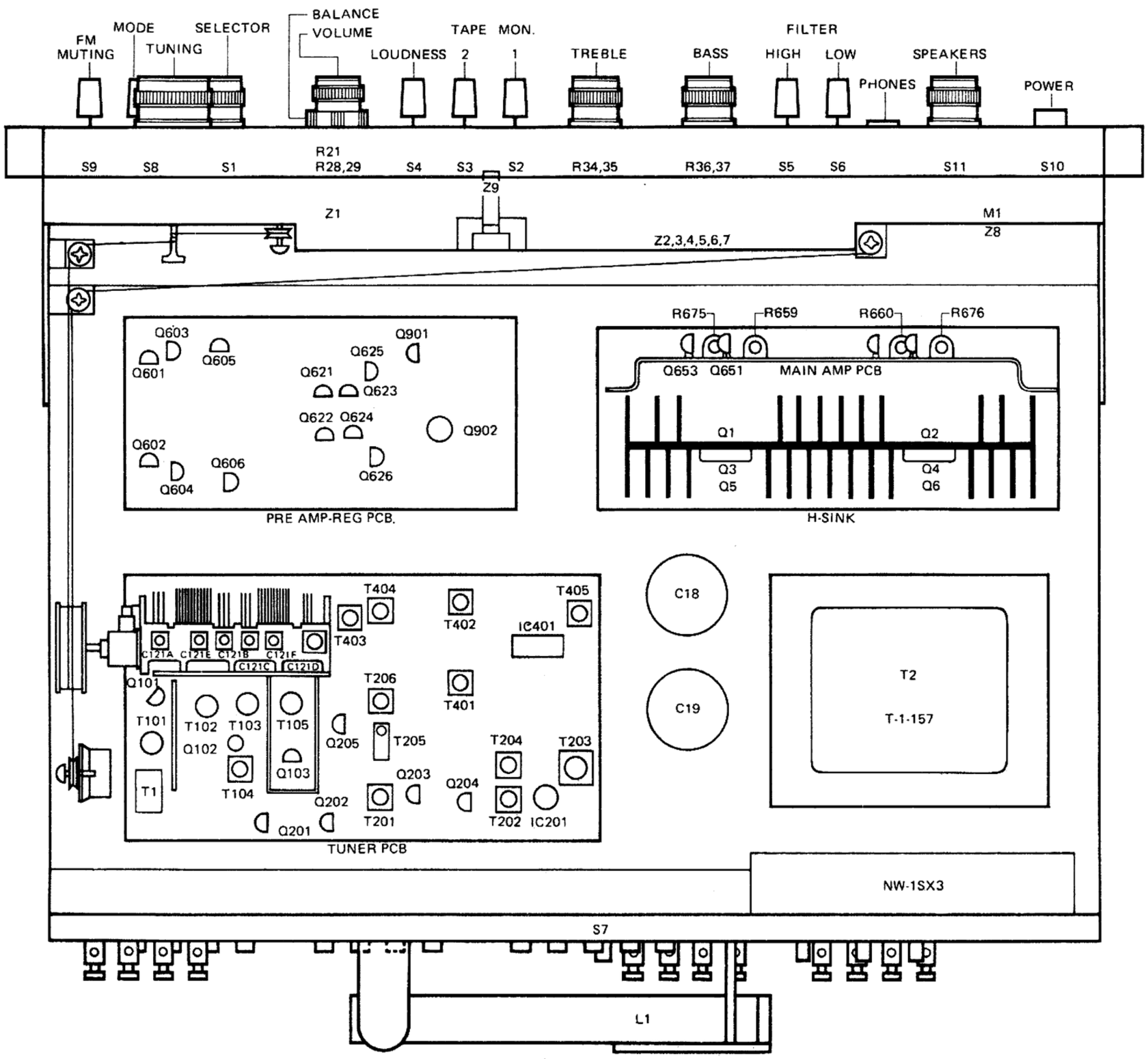

CHASSIS ASSEMBLY

Parts No.	Description	Symbol	Parts No.	Description	Symbol
110157 O	POWER TRANS T-1-157	T2	311151 J	RES 150 OHM 1/4P	R48, 46
740058 O	DIAL DRUM 33ϕ		311102 J	RES 1K OHM 1/4P	R47
786032 O	NEEDLE S ASS.		311223 J	RES 22K OHM 1/4P	R51, 52
580504 O	PL-5 5V 75MA	Z9	311104 J	RES 100K OHM 1/4P	R49, 50
204688 U	E-CAP 35L6800MF	C18, 19	225472 K	M-CAP 0.0047MF	C16
560022 S	D S3G-1	D2, 3, 4, 5	225473 K	M-CAP 0.047 MF	C17
373682 K	M-RES 6.8K OHM 1W	R53, 54	214477 W	E-CAP 35R470MF	C12
248103 Z	C-CAP 0.01MF 1.4KV	C23	203227 W	E-CAP 25R220MF	C24
248472 Z	C-CAP 0.0047MF 1.4KV	C21, 22	311151 J	RES 150 OHM 1/4P	R49
312105 K	RES 1M OHM 1/2P	R55	500009 G	D IS188FM-1	D1

REAR PNL ASSEMBLY

Parts No.	Description	Symbol	Parts No.	Description	Symbol
606002 J	PLUG CORD	AC. POWER	740035 O	ANT STOP	
450006 O	UL SKT (B)	AC OUTLET	120016 O	AM ANT COIL	L1
490053 O	NW-IS 2.5A		245301 M	C-CAP 300PF	C1
446041 O	PUSH TER 4P	SPEAKER	245101 M	C-CAP 100PF	C2, 3
444053 O	US PIN TER 5P	PRE & MAIN	311222 J	RES 2.2K OHM 1/4P	R1
402044 O	SLD SW SL-13	S7	311223 J	RES 22K OHM 1/4P	R3, 4
453022 O	DIN CONCT	TAPE REC/P.B	311104 J	RES 100K OHM 1/4P	R5, 6, 7, 8, 11, 12, R13, 14, 17, 18
444081 O	US PIN TER 4PX2	INPUT & TAPE OUT	311334 J	RES 330K OHM 1/4P	R9, 10, 15, 16
440005 O	GND TER NUT		312105 K	RES 1M OHM 1/2P	R2
446042 O	PUSH TER 4P	ANT			

www.hifiengine.com

2.3 SCHEMATIC DIAGRAM, OVERALL

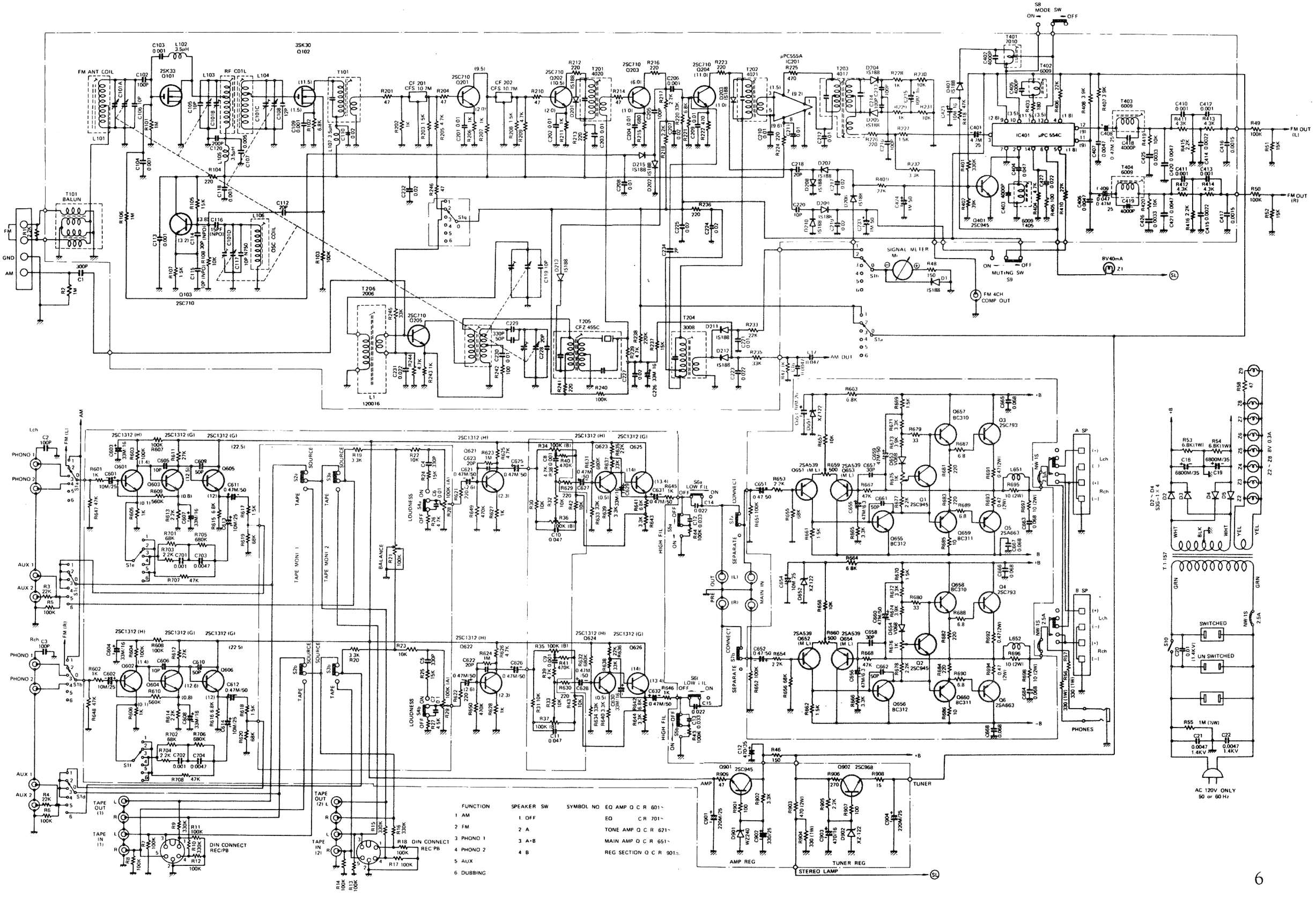

2.4 BLOCK DIAGRAM

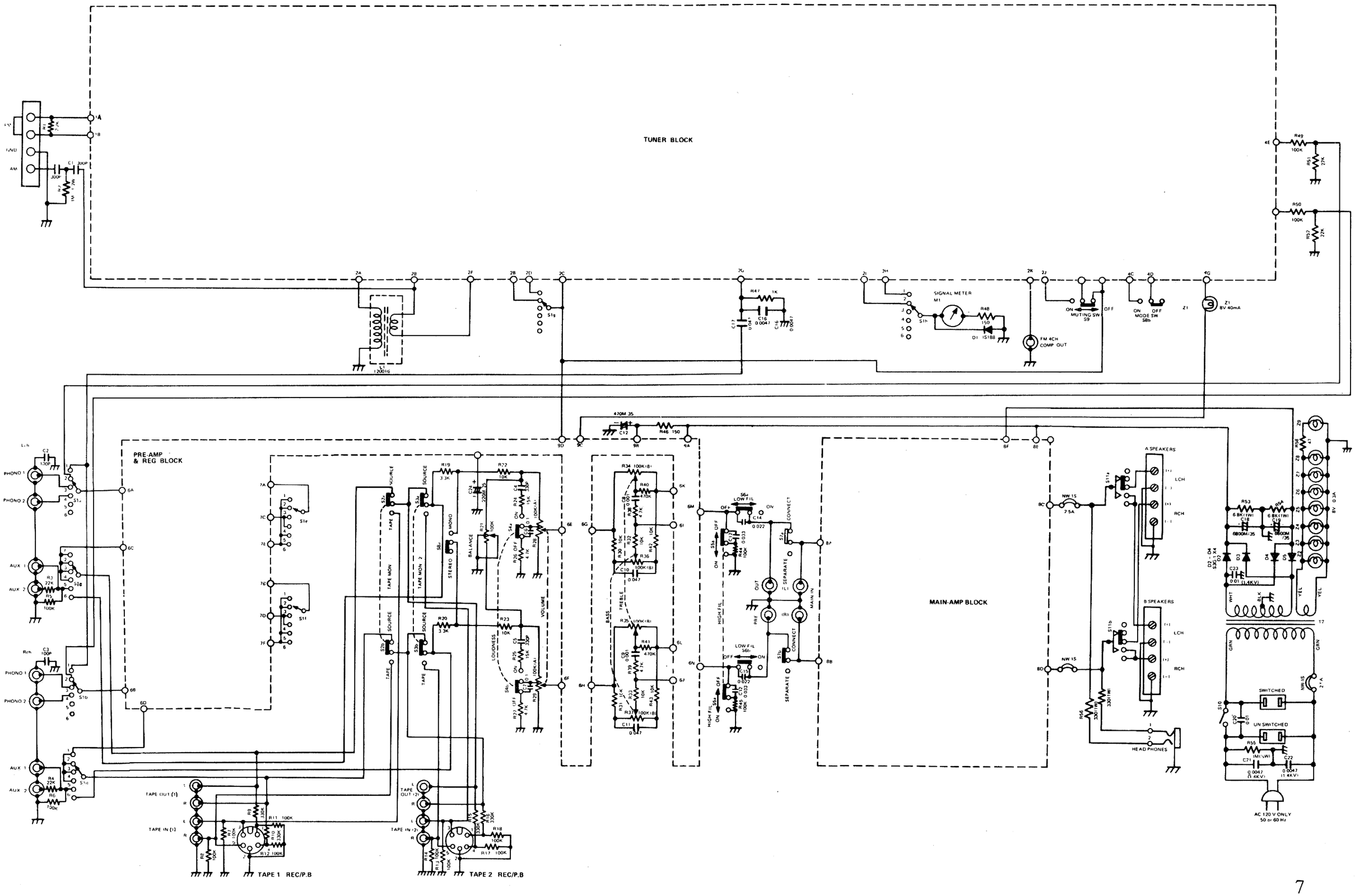

2.5 TUNER ASSEMBLY

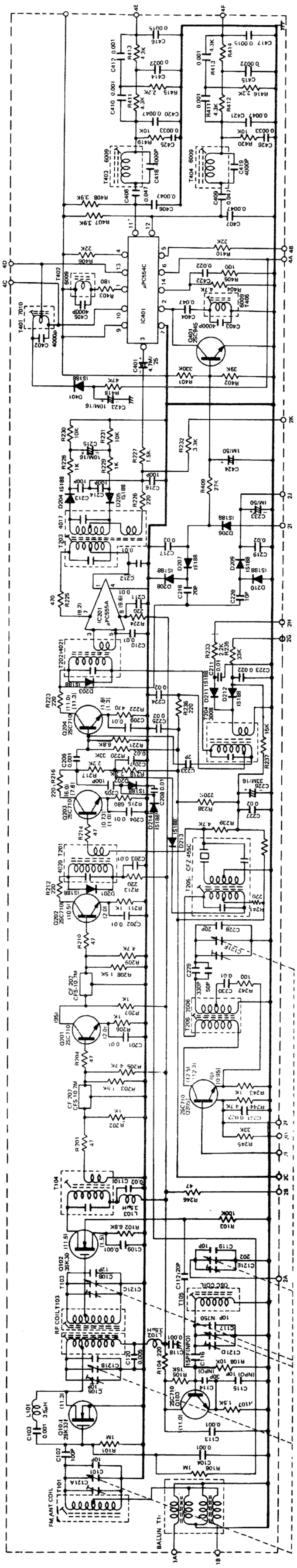

Parts No.	Description	Symbol
462020 O	TUNER PCB	
423602 O	V.C C763J114	C121
121042 O	BALUN	T1
515041 S	TR 2SC710	Q103
516011 S	FET 3SK30	Q102
516009 S	FET 2SK33	Q101
121034 O	FM RF COIL S ASS	T102
121035 O	FM RF COIL S ASS	T103
121040 O	FM OSC COIL	T105
124079 O	FM IFT	T104
121024 O	PEAKING COIL	L101, 102, 103
125007 O	FM ANT COIL	T101
311221 K	RES 220 OHM 1/4P	R104
311152 K	RES 1.5K OHM 1/4P	R107
311682 K	RES 6.8K OHM 1/4P	R102
311103 K	RES 10K OHM 1/4P	R108
311153 K	RE 15K OHM 1/4P	R105
311104 K	RES 100K OHM 1/4P	R103
311105 K	RES 1M OHM 1/4P	R101, 106
245100 K	C-CAP 10PF	C105, 101, 119
245120 K	C-CAP 12PF	C108
245200 K	C-CAP 20PF	C112
245300 K	C-CAP 30PF	C114
245101 M	C-CAP 100PF	C102
243502 Z	C-CAP 0.005MF	C120
243102 Z	C-CAP 0.001MF	C103, 104, 109, C113, 118
243201 Z	C-CAP 0.02MF	C110
249100 K	C-CAP 10PF N750	C117
249100 B	C-CAP 10PF NPO	C115
249150 B	C-CAP 15PF NPO	C116
249300 B	C-CAP 30PF NPO	C114
515041 S	TR 2SC710	Q201, 202, 203, Q204, 205
518026 S	IC-C555A	IC201
500009 G	D. IS188 FM-1	D201, 202, 203, D204, 205, 207, D208, 209, 210, D211, 212, 206, D213, 214
124017 O	FM DET	T203
124020 O	FM IFT (ORG)	T201
124021 O	FM IFT (YEL)	T202
123008 O	AM IFT (BLK)	T204
122006 O	AM OSC (RED)	T206
128009 O	C-FILTER CFZ-455C	T205
311470 K	RES 47 OHM 1/4P	R201, 204, 210, R214, 246
311101 K	RES 100 OHM 1/4P	Q242
311221 K	RES 220 OHM 1/4P	R212, 213, 216, R223, 224, 226, R241, 236
311471 K	RES 470 OHM 1/4P	R222, 225
311681 K	RES 680 OHM 1/4P	R215
311102 K	RES 1K OHM 1/4P	R202, 206, 207, R211, 228, 229, R243
311152 K	RES 1.5KOHM 1/4P	R208, 227, 203
311222 K	RES 2.2K OHM 1/4P	R217, 218, 233

www.hifiengine.com

TUNER PCB ASSEMBLY

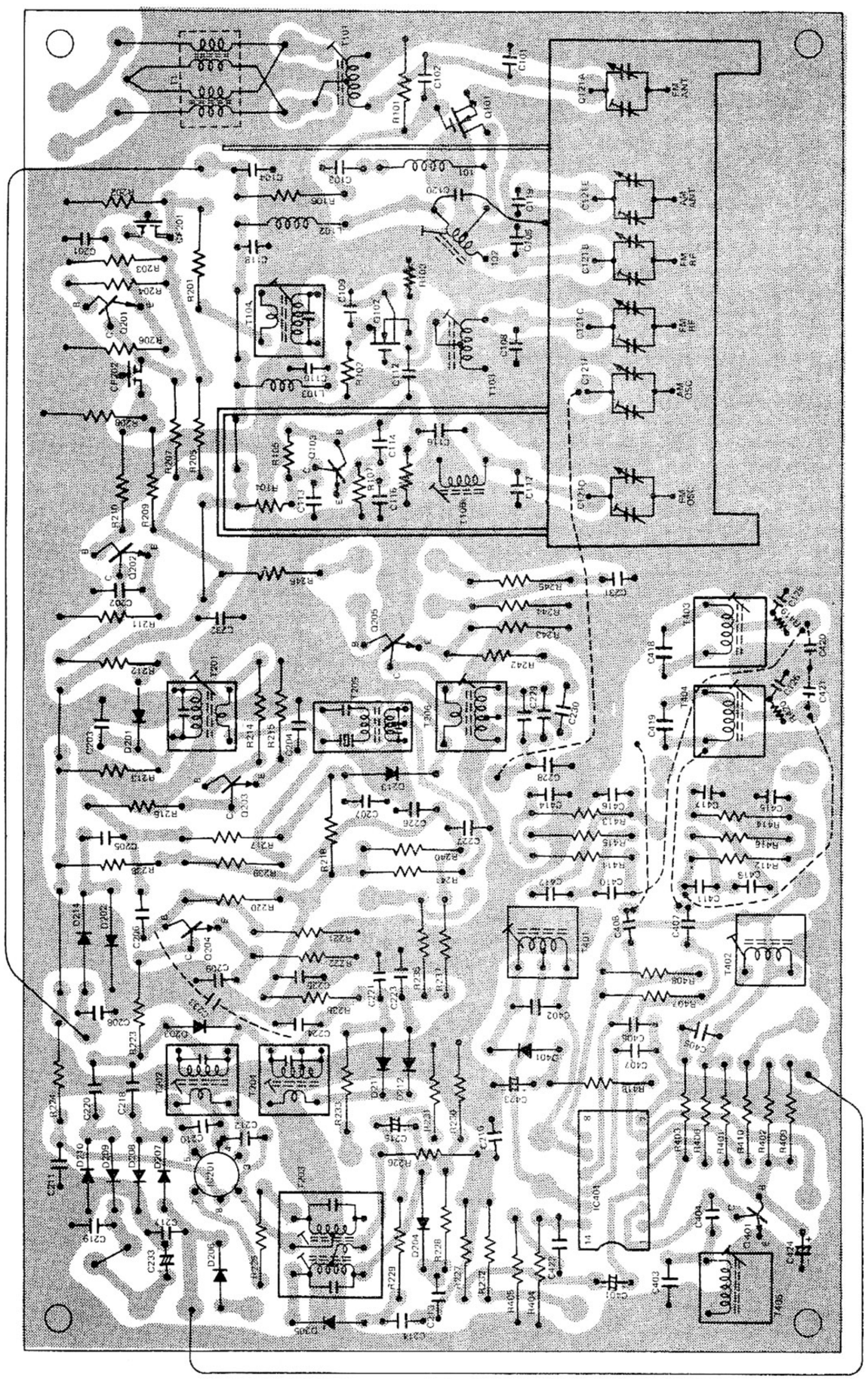

Parts No.	Description	Symbol
311332 K	RES 3.3K OHM 1/4P	R232
311472 K	RES 4.7K OHM 1/4P	R209, 205, 239, R244
311682 K	RES 6.8K OHM 1/4P	R221
311103 K	RES 10K OHM 1/4P	R230, 231
311153 K	RES 15K OHM 1/4P	R237
311333 K	RES 33K OHM 1/4P	R220, 245, 235
311104 K	RES 100K OHM 1/4P	R240
311224 K	RES 220K OHM 1/4P	R238
128014 A	CER-FIL CFS 10.7M (RED)	CF201
128014 B	CER-FIL CFS 10.7M (BLU)	CF202
225103 M	M-CAP 0.01MF	C221, 230
225223 M	M-CAP 0.022MF	C231, 223
235331 K	S-CAP 330PF	C229
245209 C	C-CAP 2PF	C233
245100 K	C-CAP 10PF	C119, 220
245200 K	C-CAP 20PF	C218, 228
245500 M	C-CAP 50PF	C229
245101 M	C-CAP 100PF	C213, 214, 205, C216
243102 Z	C-CAP 0.001MF	C206
243103 Z	C-CAP 0.01MF	C210, 211, 212, C202, 201, 203, C204, 209, 208
243203 Z	C-CAP 0.02MF	C207, 217, 219, C224, 225, 227, C232
202106 W	E-CAP 16R10	C215
202336 W	E-CAP 16R33	C226
205105 W	E-CAP 50R1	C233
225102 K	M-CAP 0.001MF	C410, 412, 411, C413
225222 K	M-CAP 0.0022MF	C414, 415
225332 K	M-CAP 0.0033MF	C425, 426
225472 K	M-CAP 0.0047MF	C406, 407, 420, C421
225152 K	M-CAP 0.0015MF	C416, 417
225223 M	M-CAP 0.022MF	C422
225473 M	M-CAP 0.047MF	C404, 408, 409
205105 W	E-CAP 50R1 MF	C424
203475 W	E-CAP 25R4.7MF	C401
202106 W	E-CAP 16R10 MF	C423
518022 S	IC μPC 554C	IC401
515045 S	TR 2SC945	Q401
500009 G	D. IS188FM-1	D401
126009 O	67KHZ FIL	T402, 403, 404, T405
127010 O	38KHZ T	T401
311222 J	RES 2.2K OHM 1/4P	R415, 416
311432 J	RES 4.3K OHM 1/4P	R411, 412, 413, R414
311101 K	RES 100 OHM 1/4P	R405
311181 K	RES 180 OHM 1/4P	R403
311392 K	RES 3.9K OHM 1/4P	R408, 407
311472 K	RES 4.7K OHM 1/4P	R404
311103 K	RES 10K 1/4P	R419, 420
311223 K	RES 22K OHM 1/4P	R406, 410

Parts No.	Description	Symbol
311473 K	RES 47K OHM 1/4P	R418
311393 K	RES 39K OHM 1/4P	R402
311333 K	RES 33K OHM 1/4P	R409
311334 K	RES 330K OHM 1/4P	R401
235402 K	S-CAP 4000PF	C402, 405, 403, C418, 419

2.6 MAIN AMP. ASSEMBLY

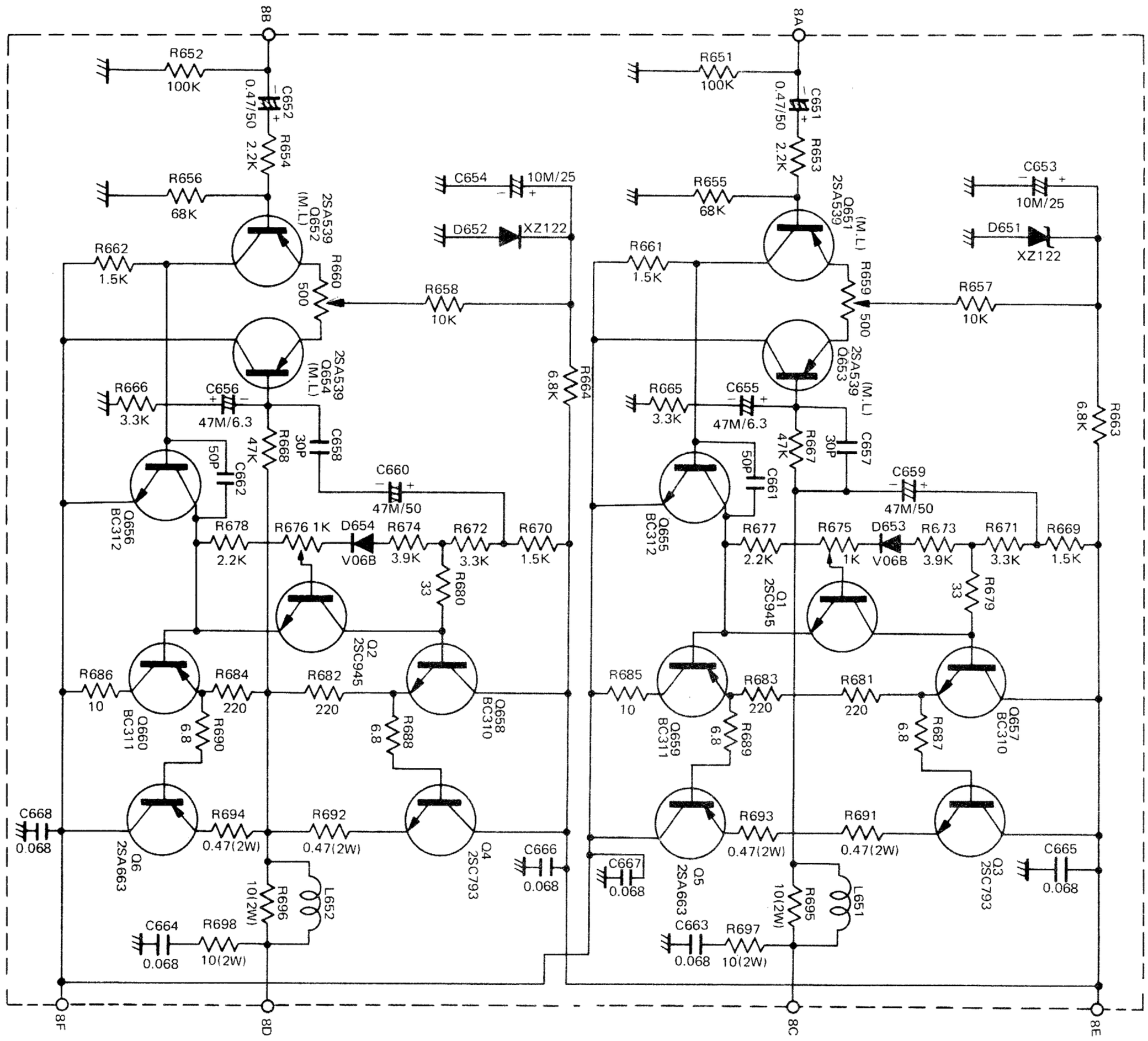

MAIN AMP PCB ASSEMBLY

Parts No.	Description	Symbol
748007 O	H-SINK	
513025 S	P-TR 2SC793	Q3, 4
513038 S	P-TR 2SA663	Q5, 6
515045 S	TR 2SC945	Q1, 2
463012 O	MAIN AMP PCB	
514066 S	TR 2SA539	Q651, 652, 653, Q654
515059 S	TR BC310	Q657, 658
514077 S	TR BC311	Q659, 660
515060 S	TR BC312	Q655, 656
502020 S	ZD XZ-122	D651, 652
560023 S	D V06B	D653, 654
225683 M	M-CAP 0.068MF	C665, 666, 667, C668, 663, 664
205474 W	E-CAP 50R0.47MF	C651, 652
203106 W	E-CAP 25R10MF	C653, 654
200476 W	E-CAP 6.3R47MF	C655, 656
205476 W	E-CAP 50R47MF	C659, 660
245500 M	C-CAP 50PF	C661, 662
245300 M	C-CAP 30PF	C657, 658
430044 O	KVSF10-5BM B500 OHM	R659, 660
430045 O	KVSF10-5BM B1K	R675, 676

Parts No.	Description	Symbol
121047 O	CH. COIL ASS	L651, 652
374100 K	M-RES 10 OHM 2W	R695, 696
374479 K	M-RES 0.47 OHM 2W	R691, 692, 693, R694
374100 K	M-RES 10 OHM 2W	R697, 698
311688 J	RES 6.8 OHM 1/4P	R687, 688, 689, R690
311100 J	RES 10 OHM 1/4P	R685, 686
311330 J	RES 33 OHM 1/4P	R679, 680
311221 J	RES 220 OHM 1/4P	R681, 682, 683, R684
311152 J	RES 1.5K OHM 1/4P	R661, 662, 669, R670
311222 J	RES 2.2K OHM 1/4P	R653, 654, 677, R678
311332 J	RES 3.3K OHM 1/4P	R665, 666, 671, R672, 663, 664
311392 J	RES 3.9K OHM 1/4P	R673, 674
311103 J	RES 10K OHM 1/4P	R657, 658
311473 J	RES 47K OHM 1/4P	R667, 668
311683 J	RES 68K OHM 1/4P	R655, 656
311104 J	RES 100K OHM 1/4P	R651, 652

www.hifiengine.com

MAIN AMP. ASSEMBLY

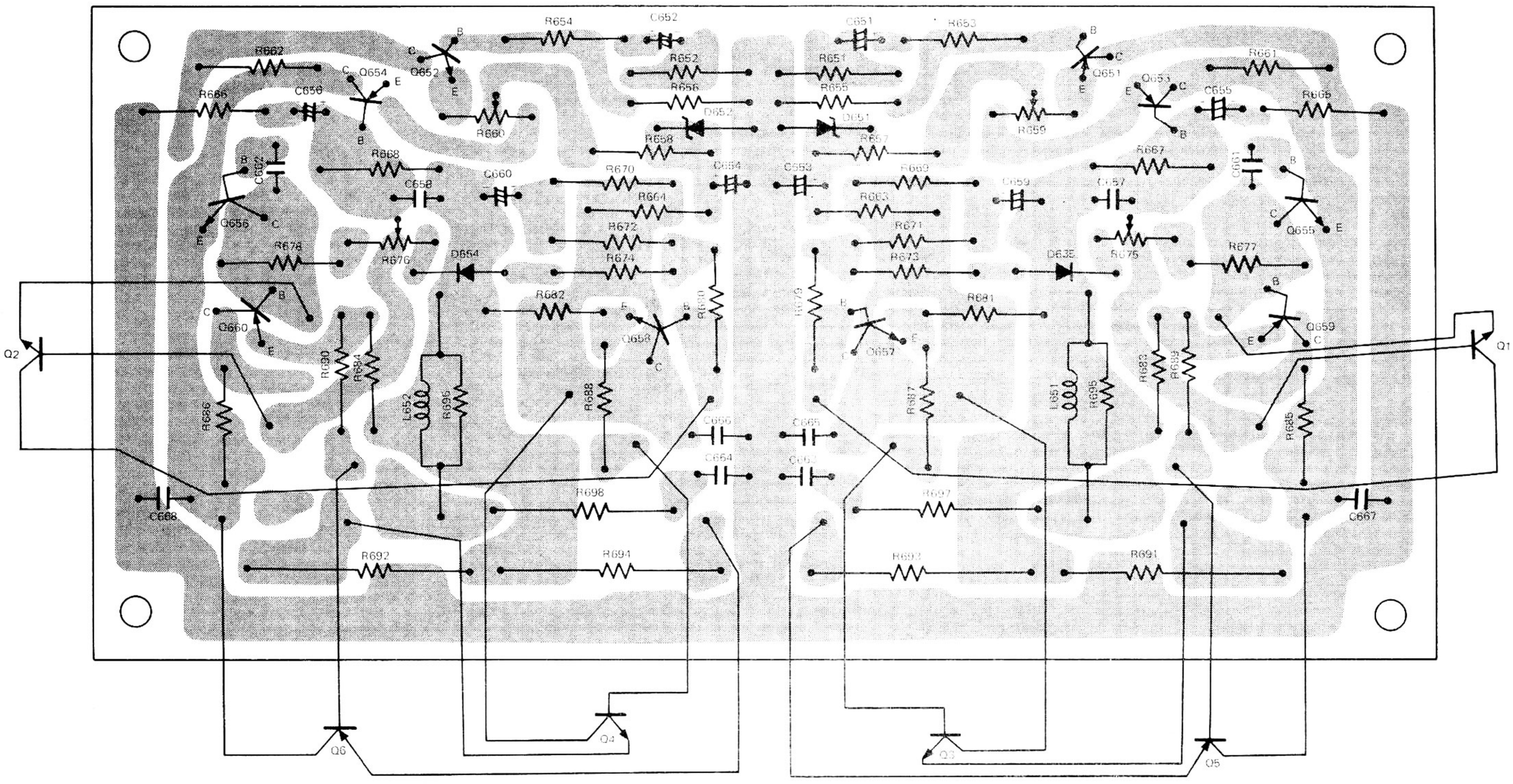

2.7 PRE AMP–REG ASSEMBLY

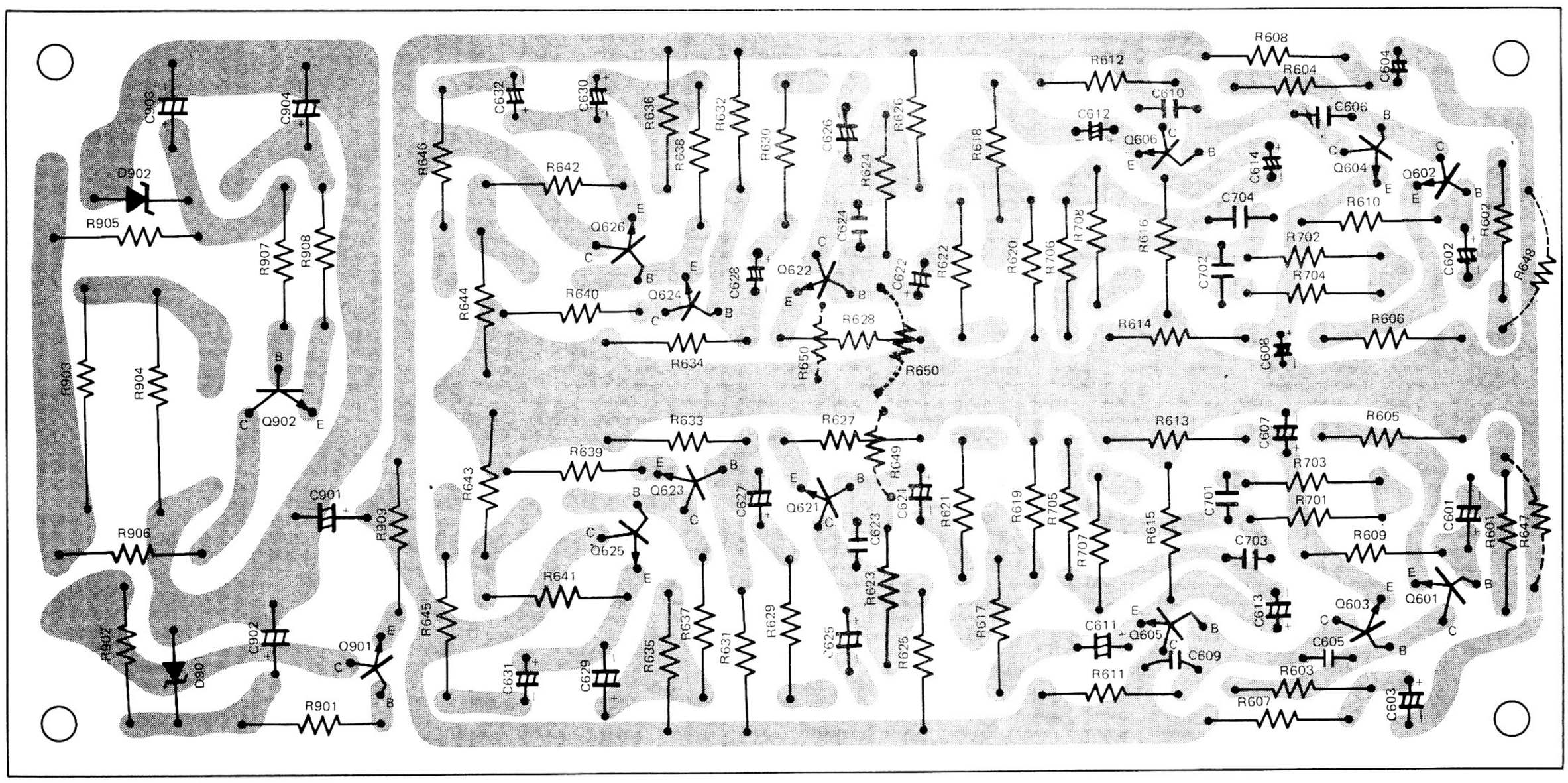

PRE AMP– REG PCB ASSEMBLY

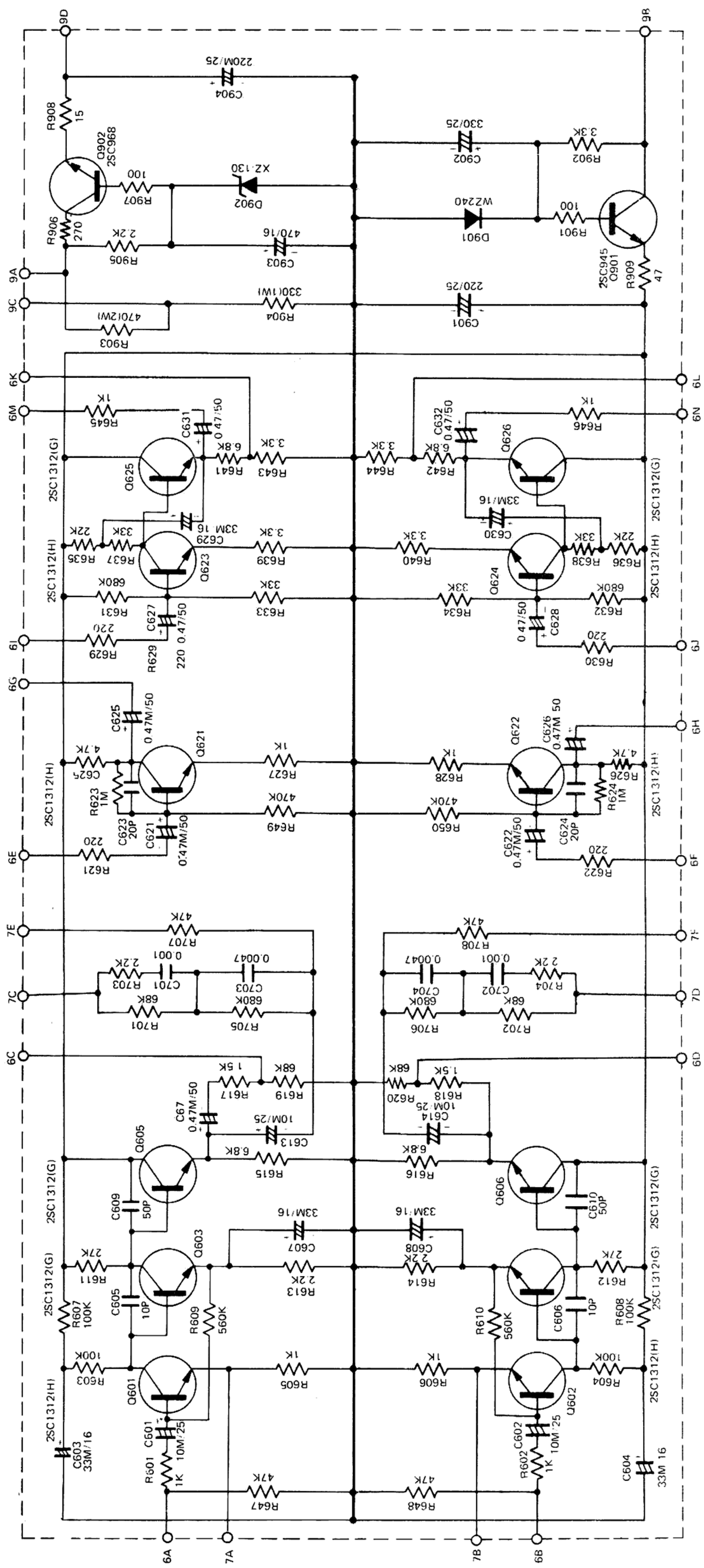

Parts No.	Description	Symbol
461218 O	PRE AMP-REG PCB	
515063 S	TR 2SC1312 (H)	Q601, 602, 621, Q622, 623, 624
515062 S	TR 2SC1312 (G)	Q603, 604, 605, Q606, 625, 626
515045 S	TR 2SC945	Q901
515039 S	TR 2SC968	Q902
502022 S	ZD XZ 130	D902
502021 S	ZD WZ 240	D901
245200 M	C-CAP 20PF	C623, 624
245100 M	C-CAP 10PF	C605, 606
245500 M	C-CAP 50PF	C609, 610
225102 K	M-CAP 0.001	C701, 702
225472 K	M-CAP 0.0047	C703, 704
202336 W	E-CAP 16R33MF	C603, 604, 607, C608, 629, 630
203106 W	E-CAP 25R10MF	C601, 602, 613, C614
203337 W	E-CAP 25R330MF	C902
205474 W	E-CAP 50R0.47MF	C611, 612, 621, C622, 625, 626, C627, 628, 631, C632
202477 W	E-CAP 16R470	C903
203227 W	E-CAP 25R220	C904, 901
311221 J	RES 220 OHM 1/4P	R621, 622, 629, R630
311101 J	RES 100 OHM 1/4P	R901, 907
311102 J	RES 1K OHM 1/4P	R645, 646, 601, R602, 605, 606, R627, 628
311152 J	RES 1.5K OHM 1/4P	R617, 618
311222 J	RES 2.2K OHM 1/4P	R613, 614, 703, R704, 905
311332 J	RES 3.3K OHM 1/4P	R639, 640, 643, R644, 902
311472 J	RES 4.7K OHM 1/4P	R625, 626
311682 J	RES 6.8K OHM 1/4P	R615, 616, 641, R642
311223 J	RES 22K OHM 1/4P	R635, 636
311333 J	RES 33K OHM 1/4P	R633, 634, 637, R638
311473 J	RES 47K OHM 1/4P	R647, 648, 707, R708
311683 J	RES 68K OHM 1/4P	R619, 620, 701, R702
311104 J	RES 100K OHM 1/4P	R603, 604, 607, R608
311474 J	RES 470K OHM 1/4P	R649, 650
311684 J	RES 680K OHM 1/4P	R631, 632, 705, R706
311105 J	RES 1M OHM 1/4P	R623, 624
374471 K	M-RES 470 OHM 2P	R903
373331 K	M-RES 330 OHM 1P	R904
311470 J	RES 47 OHM 1/4P	R909
311150 J	RES 15 OHM 1/4P	R908
311271 J	RES 270 OHM 1/4P	R906
311273 J	RES 27K OHM 1/4P	R611, 612
311564 J	RES 560K OHM 1/4P	R609, 610

3. TRANSISTOR SPECIFICATIONS

3.1 INTEGRATED CIRCUITS

Type	Class of Service	Maximum Ratings TA = 25°C					Electrical Characteristics (Typical Value)						Description & Manufacture
		Power Supply Vcc(V)	Power Dissipation Pd(mW)	Lamp Driver VL(V) IL(mA)	Operating Temp. Range TA(°C)	Storage Temp. Range (°C)	Input Impedance (KΩ)	Stereo Separation 1kHz (dB)	Channel Balance (dB)	SCA Rejection (dB)	Lamp Level (mV)	Muting Level (V)	
μPC 554C	FM MULTIPLEX STEREO DEMODULATOR	+15	400	15V 100mA	0 ~ +75	−40 ~ +125	20	45	0.2	55	12	1.08	MONOLITHIC NEC

μPC 554C SCHEMATIC DIAGRAM

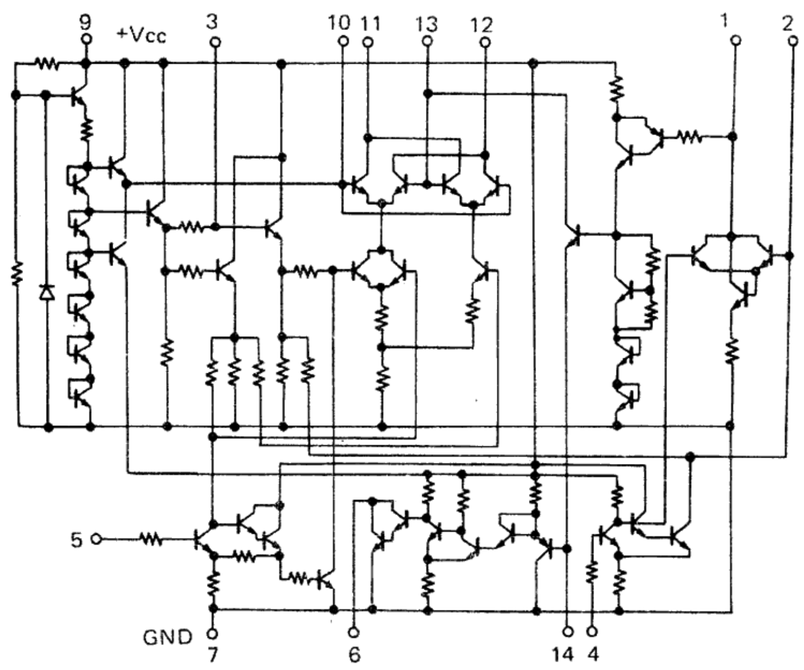

CONNECTION DIAGRAM (TOP VIEW)

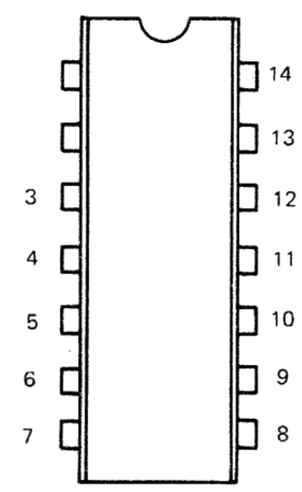

LINEAR INTEGRATED CIRCUITS

Type	Class of Service	Maximum Ratings TA = 25°C					Electrical Characteristics (Typical Value)						Description & Manufacture
		Power Supply Vcc(V)	Power Dissipation Pd(mW)	Input Voltage (V)	Operating Temp. Range TA(°C)	Storage Temp. Range (°C)	Input Impedance (KΩ)	Output Impedance (KΩ)	Gain (dB)	NF or Noise	Output Voltage (V)	Power Consumption	
PA7-703E μPC555A	WIDE-BAND AMPLIFIER	+20	200	±5	0 ~ +70	−65 ~ +150	0.33 m℧ 0.30 m℧	0.05 m℧ 0.015 m℧	+43 at 10.7MHz 31			170mW 110mW	MONOLITHIC PHILCO NEC
M-5113T TA-7037M	WIDE-BAND AMPLIFIER & DISCRIMINATORS	+10	650 300	±3	−20 ~ +75	−40 ~ +125	3	3.15	at 10.7MHz 60			at 7.5V 120mW 16mA	HONOLITHIC MITSUBISHI TOSHIBA

M-5113T & TA-7037M

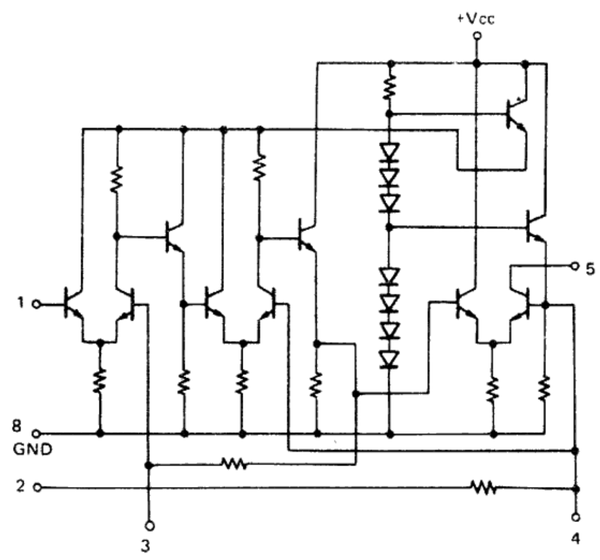

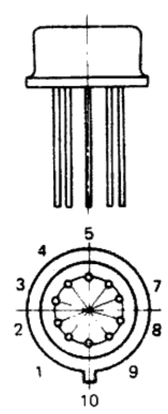

PA7-703E, μPC555A

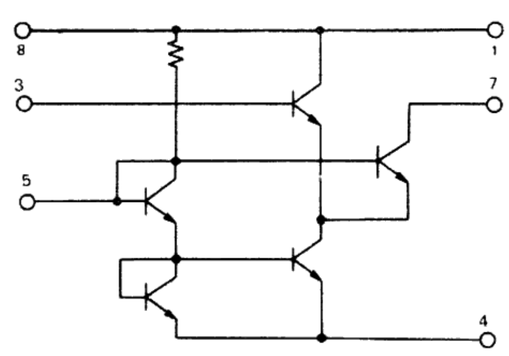

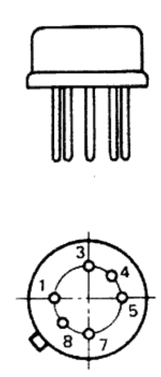

www.hifiengine.com

3.2 TRANSISTORS AND DIODES

FIELD EFFECT TRANSISTOR COMPLEMENT

Type	Description	Class of Service	Maximum Ratings						Electrical Characteristics (Typical Value) TA = 25°C																Manufacture
			B_{DSE} (V)	V_{GDX} (V)	I_D (mA)	PT (mW)	Tstg (°C)	Tch (°C)	I_{GSS} Condition	I_{GSS} (nA)	I_{DSS} Condition	I_{DSS} (mA)	V_{GS} Condition	V_{GS} (V)	Yfs Condition	Yfs (m℧)	Yos Condition	Yos (m℧)	C_{RSS} Condition	C_{RSS} (PF)	P_G Condition	P_G (dB)	NF Condition	NF (dB)	
2SK33	Si Dualgate N-Cannel	FM-RF AMP		20	10	150	−55 ~ 125	125	V_{DS}=0 V_{GS}=−1V	Max. 100	V_{DS}=10V V_{GS}=0	2.5 ~ 20.0	V_{DS}=10V I_D=10μA	−1 ~ −8	V_{DS}=10V V_{GS}=0 100MHz	7			V_{DS}=10V V_{GS}=0 1MHz	0.5	V_{DS}=10V V_{GS}=0 100MHz	20	V_{DS}=10V V_{GS}=0 100MHz	2.5	MITSUBISHI
3SK30	Si Dualgate N-Channel	FM-RF AMP & MIXER		15	10	200	−65 ~ 150	150	V_{DS}=0 V_{GS}=−10V	Max. 100	V_{DS}=10V V_{GS}=0	3 ~ 20	V_{DS}=10V I_D=20μA	−6	V_{DS}=10V V_{GS}=0 1kHz	7.5			V_{DS}=10V V_{GS}=0 1MHz	0.4	V_{DS}=10V V_{GS}=0 100MHz	17	V_{DS}=10V V_{GS}=0 100MHz	2.0	HITACHI
2SK34	Si N-Channel	AUDIO AMP		30	20	150	−55 ~ 125	125	V_{DS}=0 V_{GS}=−10V	Max. 10	V_{DS}=10V V_{GS}=0	0.3 ~ 12	V_{DS}=10V I_D=10μA	−0.3 ~ −6	V_{DS}=10V V_{GS}=0 1kHz	3	V_{DS}=10 V_{GS}=0 1MHz	8					V_{DS}=10V I_D=0.1mA 100Hz	3	MITSUBISHI

TRANSISTOR COMPLEMENT

TYPE	Description	Class of Service	Maximum Ratings (Ta=25°) (Absolute Values)						Electrical characteristics (Typical Value (Ta=25°C))											Manufacture
			Collector to Base Voltage V_{CBO} (V)	Emitter to Base Voltage V_{EBO} (V)	Collector Current I_C (mA)	Emitter Current I_E (mA)	Collector Dissipation P_C(mW)	Junction temperature Tj °C	Condition of Measurement V_{CE} (V)	Condition of Measurement I_E (mA)	hfe (hFE)	NF dB	fαb (fT) MHz	Cob PF	hie (real) Ω	Collector/Cut-off Current I_{CBO} (maxμA)	Collector/Cut-off Current V_{CB} V	Emitter/Cut-off Current I_{EBO} (maxμA)	Emitter/Cut-off Current V_{EB} V	
2SA539	PNP Si E-P	Medium Amp	−60	−5	−200		250	125	−1	−50	80		200	8.5	20	0.2	−30			NEC
2SA697	PNP Si E-P	Medium Amp	−65	−4	−300		500	125	−6	−10	70		150	10		1	−25	1	−2	MITSUBISHI
2SC710	NPN Si E-P	RF Amp	25	4	100		200	125	6	1	100	3	200	2.0		1	25	5	2	MITSUBISHI
2SC945	NPN Si E-P	Small Signal Amp	50	5	100		250	125	6	1	150		250	4.5	25	0.1	40			NEC
2SC968	NPN Si E-P	Medium Amp	50	5	500		500	175	6	1	160		60	10	70	1	12			FUJITSU
2SC1211	NPN Si E-P	Medium Amp	65	4	300		500	125	6	10	100		150	10		1	25	1	2	MITSUBISHI
2SC1335	NPN Si E-P	Low Noise Amp	30	5	100		200	125	12	2	250	3	230	1.8		0.5	18	0.5	2	HITACHI
2SC1312	NPN Si E-P	Low Noise Amp	35	4	100		200	125	6	1	800		150	2.5		0.1	25	0.01	2	MITSUBISHI
BC310	NPN Si P	Medium Amp	70	5	1A		3570	200	10	10	110		20	12		50	40			SGS
BC311	PNP Si P	Medium Amp	−70	−5	1A		2860	200	−10	−10	110			13		100	30			SGS
BC312	NPN Si P	Medium Amp	100	5	150		5W	200	10	30	130			6		50	75	100mA	4	SGS
2SA663	PNP Si E-Messa	Power Output	−100	−5	7A		60W	150	−5	−1A	80		6	600		1mA	50	1mA	5	TOSHIBA
2SC793	NPN Si T-Messa	Power Output	100	5	7A		60W	150	5	150	50		9	230	15	1mA	30			TOSHIBA

RECTIFIER, DIODE, ZENER-DIODE

Type	Description	Maximum Rating (TA = 25°C)						Electrical Characteristics (Typical Value) TA = 25°C						CES Type & Manufacture
		Peak Inverse Voltage (V)	Dissipation (nW)	Output Current (mA)	Inverse Current A	Surge Current A	Junction Temperature (°C)	Condition		Condition		Condition		
S3G-1	Si RECTIFIER	100		3A	V_R=100 10μA	100A	175							SHINDENGEN
IOD-1	Si RECTIFIER	100		1A	50μA	50A	−40 ~ +150							IS1664 IR
IN60 (IS188)	Ge DIODE POINT CONTACT	Peak 40 35		50mA	V_R=10V 75μA	0.5A	+70	γ 40MHz	Min. 50%	C V_R=1V	0.8PF			(KURAKE)
V06B	Si VARISTOR	100		1.1A		25A	−40 ~ +165							KURAKE (Yellow)
XZ-122	Si ZENER DIODE		500mW		1μA		175	V_Z I_Z=5mA	11.9 ~ 12.6V	Rd I_Z = 5mA	Max. 15Ω			JRC
WZ-240	Si ZENER DIODE	21	500mW		1μA		175	V_Z I_Z = 5mA	22.8 ~ 25.2V	Rd I_Z = 5mA	Max. 30Ω			JRC
WZ-130	Si ZENER DIODE	11	500mW		1μA		175	V_Z I_Z = 5mA	12.4 ~ 13.6V	Rd I_Z = 5mA	Max. 15Ω			JRC
S-1.5-02	Si RECTIFIER	200		1.5A		60A	−55 +125							ORIGIN

www.hifiengine.com

4. ALIGNMENT PROCEDURE

4.1 TUNER SECTION ALIGNMENT

4.1.1 FRONT END ALIGNMENT

1. Start front end alignment after 4.1.2 FM, IF alignment.
2. Set the tuning dial pointer to zero (0) position on the dial glass panel. If the dial pointer fails to coincide with the zero (0) position at the left end of the knob rotation, have it reset to zero (0) position by sliding on the dial string (See 4.3 DIAL STRING PROCEDURES).
3. Connect Audio V.T.V.M. and Oscilloscope to Tape out.
4. Connect FM signal generator to FM Antenna Terminals. Set the output impedance of Generator to 300ohm balance or 75ohm unbalance. In this case, the modulation should be set to 400Hz or 1000Hz, and Deviation to 75KHz.
5. Repeat alignment as per the Figure 1.
   Make the Generator output as small as possible, so that the AF output may not be saturated.

STEP	Generator & Dial Freq.	Adjust	Indication & Remarks
1	88MHz	T105	Oscillator coil core Adjust for max. reading
2	108MHz	C121D	Oscillator Trimmer Adjust for max. reading
3	90MHz	T101 T102 T103	ANT coil & RF coil core Adjust for max. reading
4	105MHz	C121A C121B C121C	ANT & RF Trimmer Adjust for max. reading
5	Repeat step 1 2 3 4 Align after complete tuning		

Fig. 1

4.1.2 FM - IF ALIGNMENT

1. Connect 10.7MHz Sweep Generator to Test point terminal at the Front end. Make the output impedance of the Sweep Generator as large as possible as far as the alignment is not hindered.
2. Connect the vertical input of Oscilloscope to the Test point (C215) of TUNER Block.
3. Set the Tuning (Gang condenser) where no signal is present.
4. Turn the top core of IF Transformer (T104) in the Front end. Turn also the top cores of IF Transformer (T201, T202) and the Ratio Detector (T203) primary core in the TUNER Block. And adjust so as to get double-hand characteristic at 10.7MHz which is the center of ceramic filter characteristic, and the maximum amplitude on Oscilloscope.
5. By attenuating Sweep Generator output as much as possible, make repeated minute alignments specified in the paragraph 4.
6. Change vertical input of Oscilloscope to AF output (2K) of TUNER Block.
7. Turn Ratio Detector secondary core (T203) and align to the S - figure characteristic which centers around 10.7MHz on Oscilloscope.
8. Connect the cutting point of Electrolytic Capacitor C215; reference 2. above.

4.1.3 MULTIPLEX ALIGNMENT

1. Start Multiplex alignment after 4.1.2 FM-IF alignment.
2. In case this alignment is made by the Multiplex Generator with RF signal, set the Generator output at 300ohm balance or 75ohm unbalance and connect to FM Antenna Terminal.
3. In case the composite Multiplex Signal Generator is used for the checking purpose, detach AF output of TUNER Block and connect the Generator to the Multiplex side.
4. Before alignment, make the perfect alignment of the Multiplex Generator. For the alignment of the modulation such as phase, level etc. of 19KHz Pilot Signal, follow the alignment procedure as specified in Fig. 2.

STEP	Generator Mod.		V.T.V.M. connection	Alignment	
	Freq.	Dev.		Adjust	Indication
1	pilot only 19KHz	7.5 KHz	4D	T401 T402 T405	Adjust for maximum reading
2	Composite signal 1KHz left ch. only	40 KHz	4E or TAPE OUT Left	T401 T402 T405	Adjust for maximum reading
3	as above		4F or TAPE OUT Right	T401	Adjust for minimum reading
4	Composite signal 1KHz right ch.only		4E & 4F or TAPE OUT	T401	step by 2.3 check at maximum channel separation
5	19KHz pilot only	7.5 KHz	4E & 4F or TAPE OUT	T403 T404	Adjust for minimum reading

Fig. 2

www.hifiengine.com

5. Connect Audio V.T.V.M. to Terminal (4F, 4E, Right output, Left output) of TUNER Block in accordance with the steps specified in Fig. 2.
6. Make the perfect tuning by setting RF output level of Multiplex Generator at 500μV (54dB). Then follow the alignment procedures specified in Fig. 2.

4.1.4 AM - RF ALIGNMENT

1. Start AM - RF alignment after 4.1.5 AM IF alignment.
2. AM Signal Generator output should be connected to Test Loop or several turns of wire in Loop. The Modulation should be set to 400Hz or 1000Hz, 30%.
3. Couple Generator Loop with AM Antenna as loosely as possible.
4. Connect Audio V.T.V.M. to Tape output.
5. Make the alignment based on the alignment procedures specified in Fig. 3. Attenuate the output of Generator as much as possible, so that the AF output may not be saturated.

STEP	Generator & Dial Freq.	Adjust	Indication & Remarks
1	520KHz	T206	Oscillator Coil Core Adjust for Maximum Reading
2	1650KHz	C121F	Oscillator Trimmer Adjust for Maximum Reading
3	600KHz	L1	Antenna Coil Adjust for Maximum Reading
4	1400KHz	C121E	Antenna Trimmer Adjust for Maximum Reading
5	Repeat Steps 1 ~ 4 to obtain best tracking		

Fig. 3

4.1.5 AM - IF ALIGNMENT

1. Connect 455KHz (or 470KHz) Sweep Generator output to Test Loop or several turns of wire in Loop.
2. Couple Generator Loop with AM Antenna as loosely as possible.
3. Connect the vertical input of Oscilloscope to AF output Terminal (2G) in the Tuner Block.
4. Set the Tuning (Gang Condenser) at 1650KHz where it is fully open.
5. Turn IF Transformer top core (T204, T205) in TUNER Block. And adjust so as to get double-hang characteristic at 455KHz (or 470KHz) which is the center of ceramic filter characteristic, and the maximum amplitude on Oscilloscope.
6. By attenuating Sweep Generator output as much as possible, make repeated minute alignments specified in the paragraph 5.

4.2 AMPLIFIER SECTION ALIGNMENT

4.2.1 D.C. BALANCE ALIGNMENT

Adjust R659, R660 and align to make the D.C. voltage of output terminal zero (below ± 100mV).

4.2.2 IDLING CURRENT ALIGNMENT

Adjust R675, R676 and align idling current in the limits between 20mA and 30mA when Q3, Q5 and Q4, Q6 are showing no signal.

4.3 DIAL STRING PROCEDURES

1. Set Dial Pointer (NEEDLE Subassembly) to the minimum frequency positon (the extreme left).
2. Rotate Gang Condenser to the maximum capacity position.
3. As described in the drawing of Dial String procedure, Drive Drum are to be fixed, after assurance for Ear Side position (Q1).
4. After the fixture of the one side of Dial String to the Spring (Q2), and hook other side of the Spring to the Ear Side of Drive Drum (Q1).
5. Make a ½ turn along drive drum and hook it to pulley (P1), (P2), and wind in three turns on the Tuning shaft.
6. Hook the dial string from Pulley (P3) to Needle subassembly (Q3), and then hook it to Pulley (P4), (P5).
7. Wind the dial string in 1½ turns around Drive Drum, and then hook it to the Spring (Q2) so as to get the proper tension from Spring.
8. Check the movement of Needle by Tuning knob.
9. Make adjustment of position of Needle hooking point (Q3) so that it may be set at (0) and (100) on the Dial Scale (the extreme left and right) and make the final fixture.

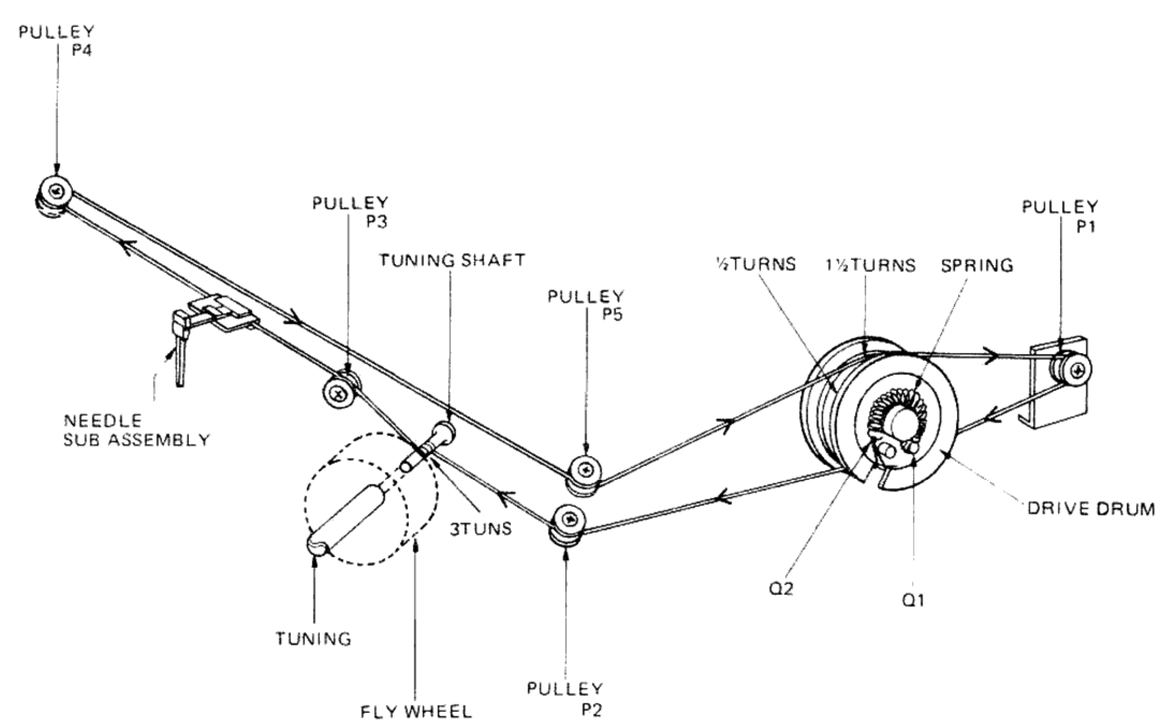

Fig. 4

www.hifiengine.com

MEMO

www.hifiengine.com

MEMO

www.hifiengine.com

965135E PRINTED IN JAPAN

www.hifiengine.com