Nikko RECEIVER

NR-719

AM/FM STEREO RECEIVER

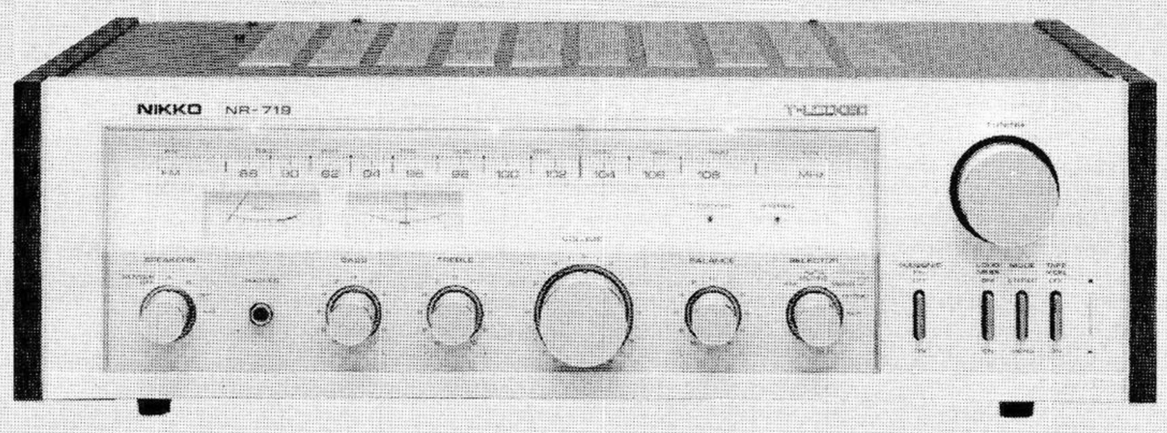

TYPE AND VOLTAGE

W-TYPE:	UL and CSA type	120V AC
E-TYPE:	NK-STD type	220/240V AC
N-TYPE:	DEMKO and SEMKO type	
D-TYPE:	DIN type	

SERVICE MANUAL

CONTENTS

SPECIFICATIONS 1, 2
BLOCK DIAGRAM 3
CIRCUIT DESCRIPTION 4, 5
DISASSEMBLY 6, 7
ALIGNMENT ..... 8 ~ 12
POWER TRANSISTORS MOUNTING ASSEMBLY 13
SCHEMATIC DIAGRAM 14, 15
P. C. BOARD 16, 17
NOTICE 18
DIAL CORD INSTALLATION 19
PARTS LOCATION 20
PARTS LIST ..... 21 ~ 25
SEMICONDUCTOR DATA,
- TRANSISTORS 26
- FIELD EFFECT TRANSISTOR 26
- DIODES, LED'S 26
- ZENER DIODES 26
- INTEGRATED CIRCUITS ..... 27 ~ 30

www.hifiengine.com

SPECIFICATIONS

〈W, E & N–TYPE〉

FM TUNER SECTION

Usable Sensitivity: ..... better than 10 dBμ (3.16 μV)
50 dB Quieting Sensitivity:
..... better than 15 dBμ (5.6 μV)
Signal to Noise Ratio: ..... better than 65 dB
T. H. Distortion (1 KHz) Mono: ..... less than 0.3 %
Stereo: ..... less than 0.5 %
Alternate Channel Selectivity: ..... better than 35 dB
Sprious Response Rejection: ..... better than 70 dB
Image Frequency Rejection: ..... better than 42 dB
IF Rejection: ..... better than 70 dB
AM Rejection: ..... better than 40 dB
Capture Ratio: ..... better than 3 dB
Stereo Separation (100 Hz): ..... better than 30 dB
(1 KHz): ..... better than 35 dB
(10 KHz): ..... better than 30 dB
Subcarrier Suppression: ..... better than 40 dB
Muting Sensitivity: ..... 25 dBμ ±8 dB
FM Frequency Range: ..... 87.9 ~ 108.5 MHz
Antenna Impedance:
..... 300 ohms balanced & 75 ohms unbalanced
Output Level: ..... 550 mV ±2 dB

AM TUNER SECTION

Usable Sensitivity: ..... better than 42 dBμ (125.9 μV)
Signal to Noise Ratio: ..... better than 45 dB
Image Frequency Rejection (1000 KHz):
..... better than 30 dB
IF Rejection (1000 KHz): ..... better than 30 dB
Selectivity (±10 KHz): ..... better than 30 dB
AM Frequency Range: ..... 530 ~ 1630 KHz
Output Level: ..... 165 mV ±2 dB

AUDIO AMPLIFIER SECTION

Continuous Power Output per channel, 8 ohms:
20 Hz ~ 20 KHz ..... more than 35 Watts
1 KHz ..... more than 35 Watts
T.H. Distortion, 8 ohms:
Continuous Power Output ..... less than 0.05 %
1 Watt Power Output ..... less than 0.05 %
I.M. Distortion, 8 ohms:
Continuous Power Output ..... less than 0.05 %
1 Watt Power Output ..... less than 0.05 %
IHF Power Bandwidth, 8 ohms: ..... 20 Hz ~ 20 KHz
Damping Factor @ 1 KHz, 8 ohms: 40
Frequency Response:
PHONO → TAPE OUT (RIAA Equalization)
..... 30 Hz ~ 15 KHz ±1.5 dB
AUX, TAPE IN → SP. TER.
..... 20 Hz ~ 20 KHz ±1.5 dB
Input Sensitivity for 35 Watts Power Output:
PHONO ..... 2.5 mV ±2 dB
AUX, TAPE IN ..... 150 mV ±2 dB
Phono Max. Input Capability, @ 1 KHz:
..... more than 120 mV
Output Level, @ Continuous Power Output,
(Input: PHONO):
TAPE OUT ..... 150 mV ±2 dB
Tone Control:
BASS (70 Hz) Cut ..... –10 dB ±3 dB
Boost ..... +10 dB ±3 dB
TREBLE (10 KHz) Cut ..... –10 dB ±3 dB
Boost ..... +10 dB ±3 dB
Loudness Control (VOLUME: –30 dB):
70 Hz ..... +9 dB ±3 dB
10 KHz ..... +5 dB ±3 dB
Subsonic Filter, @ 20 Hz: ..... –3 dB ±2 dB
Signal to Noise Ratio, IHF "A" Network:
PHONO ..... better than 80 dB
AUX, TAPE IN ..... better than 95 dB
Idling Current: ..... 20 mA ±10 mA
Midpoint Voltage: ..... 0V ±50 mV

www.hifiengine.com

〈 **D–TYPE** 〉 They were measured according to DIN standard

FM TUNER SECTION

Usable Sensitivity: . . . . . better than 6 dBμ (2.0 μV)
50 dB Quieting Sensitivity:
. . . . . better than 15 dBμ (5.6 μV)
Signal to Noise Ratio: . . . . . better than 58 dB
T.H. Distortion (1 KHz) Mono: . . . . . less than 0.3 %
Stereo: . . . . . less than 1.0 %
Alternate Channel Selectivity: . . . . . better than 35 dB
Sprious Response Rejection: . . . . . better than 70 dB
Image Frequency Rejection: . . . . . better than 42 dB
IF Rejection: . . . . . better than 70 dB
AM Rejection: . . . . . better than 40 dB

Capture Ratio: . . . . . better than 3 dB
Stereo Separation (100 Hz): . . . . . better than 30 dB
(1 KHz): . . . . . better than 35 dB
(10 KHz): . . . . . better than 20 dB
Subcarrier Suppression: . . . . . better than 35 dB
Muting Sensitivity: . . . . . 20 dBμ ±8 dB
FM Frequency Range: . . . . . 87.5 ~ 108.5 MHz
Antenna Impedance:
. . . . . 300 ohms balanced & 75 ohms unbalanced
Output Level: . . . . . 300 mV ±2 dB

AM TUNER SECTION

Usable Sensitivity: . . . . . better than 42 dBμ (125.9 μV)
Signal to Noise Ratio: . . . . . better than 45 dB
Image Frequency Rejection (1000 KHz):
. . . . . better than 30 dB
IF Rejection (1000 KHz): . . . . . better than 30 dB

Selectivity (±10 KHz): . . . . . better than 30 dB
AM Frequency Range: . . . . . 530 ~ 1630 KHz
Output Level: . . . . . 165 mV ±2 dB

AUDIO AMPLIFIER SECTION

Continuous Power Output per channel, 4 ohms:
20 Hz ~ 20 KHz . . . . . more than 45 Watts
1 KHz . . . . . more than 47 Watts
T.H. Distortion, 4 ohms:
Continuous Power Output . . . . . less than 0.1 %
1 Watt Power Output . . . . . less than 0.1 %
I.M. Distortion, 4 ohms:
Continuous Power Output . . . . . less than 0.1 %
1 Watt Power Output . . . . . less than 0.1 %
IHF Power Bandwidth, 4 ohms: . . . . . 20 Hz ~ 20 KHz
Damping Factor @ 1 KHz, 4 ohms: 50
Frequency Response:
PHONO → TAPE OUT (RIAA Equalization)
. . . . . 30 Hz ~ 15 KHz ±1.5dB
AUX, TAPE IN → SP. TER.
. . . . . 20 Hz ~ 20 KHz ±1.5 dB
Input Sensitivity for 47 Watts Power Output:
PHONO: . . . . . 1.9 mV ±2 dB
AUX, TAPE IN: . . . . . 140 mV ±2dB
Phono Max. Input Capability, @ 1 KHz:
. . . . . more than 120 mV
Output Level, @ Continuous Power Output,
(Input: PHONO):
TAPE OUT (DIN): . . . . . 12 mV ±2 dB
Tone Control:
BASS (70 Hz) Cut: . . . . . –10 dB ±3 dB
Boost: . . . . . +10 dB ±3 dB
TREBLE (10 KHz) Cut: . . . . . –10 dB ±3 dB
Boost: . . . . . +10 dB ±3 dB

Loudness Control (VOLUME: –30 dB):
70 Hz: . . . . . +9 dB ±3 dB
10 KHz: . . . . . +5 dB ±3 dB
Subsonic Filter, @ 20 Hz: . . . . . –3 dB ±2 dB
High Filter, @ 10 KHz: . . . . . –3 dB ±2 dB
Signal to Noise Ratio, DIN Filter:
PHONO: . . . . . better than 60 dB
AUX, TAPE IN: . . . . . better than 75 dB
Idling Current: . . . . . 20 mA ±10 mA
Midpoint Voltage: . . . . . 0V ±50 mV

GENERAL

Power Requirement:
W–TYPE: . . . . . AC 120V, 60 Hz
E, N & D–TYPE: . . . . . AC 220/240 V, 50/60 Hz
Power Consumption: . . . . . 190 Watts Max.
Dimensions,
(Width): . . . . . 19 4/5 inches
(Height): . . . . . 6 1/5 inches
(Depth): . . . . . 12 3/4 inches
Weight: . . . . . 10 Kg

Specifications subject to change without notice.

www.hifiengine.com

BLOCK DIAGRAM

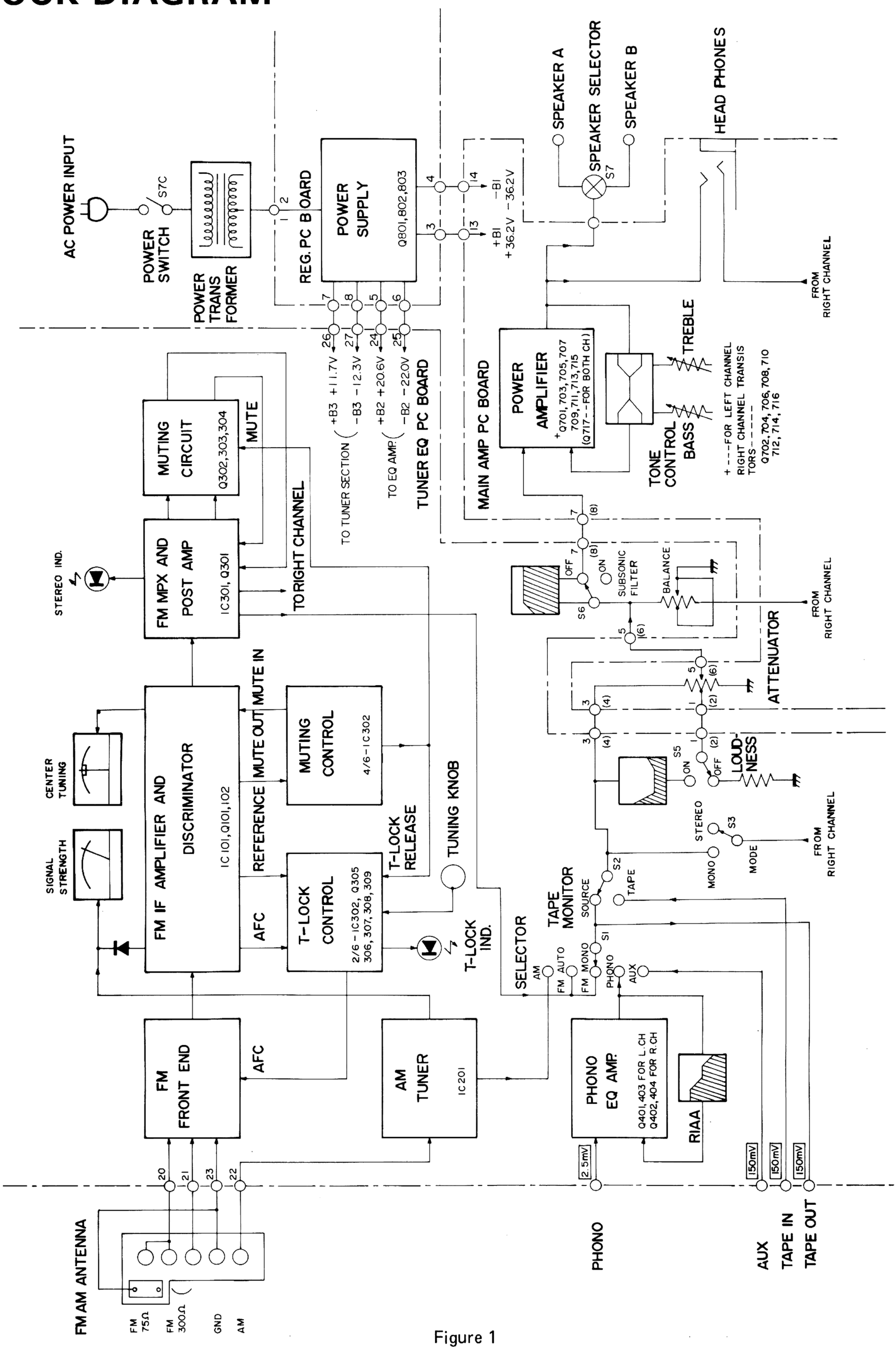

Figure 1

www.hifiengine.com

CIRCUIT DESCRIPTION

T-LOCKED (TUNE-LOCKED) SYSTEM

1. FUNCTION

The T-Locked system detects a frequency drift caused by temperature change or other reason during reception of FM broadcasting, and makes necessary compensation for minimizing the distortion due to such drift, thereby maintaining the optimum receiving state (locked-state). This locked state can be released automatically by touching the tuning knob with a finger. The locked state can also be attained automatically by releasing finger from the tuning knob after selecting a desired station. The locked state is indicated by an illuminated LED.

2. OPERATION

(a) Releasing of locked state

1. When a finger touches the tuning knob, the hum induced in the human body is applied to the IC302 (μPD4069C) pin #3, which operates as a high impedance amplifier and amplifies the hum by about 20 dB. The amplified signal, issued at the pin #4, flows through the resistor R342 and the diodes D304 and D305 where it is rectified to a DC voltage (approx. 3 ~ 6 V). This signal "H" is inverted by the IC302 (pin #5 → pin #6), thus a signal "L" (approx. 0 ~ 0.5 V) is obtained.

2. This signal cuts off the transistor Q305 (2SC945L), thereby turning off the T-Locked indicator (LED #2). At the same time, the transistor Q306 is also cut off by this signal, so that the transistor Q307 connected to the source of the Q306 is also cut off. The transistors Q308 and Q307 are functioning as a differential amplifier. The reference signal from the IC101 (HA11225) pin #10 is obtained at the collector of Q309, and this reference signal is fed back to the front end as the AFC signal. However, this signal cannot affect the local oscillation frequency. This means that the locked state has been released.

NOTE: When the FM signal is very weak, or when detuning, the mute output from IC101 pin #12 activates the Schmidt trigger circuit (IC302 pins #8, 9, 10, 11 and 1 meg. ohm) and releases the T-Lock. This signal passes through the diodes D302 and D311, in which it is also used as the muting signal.

(b) Locking

1. Upon releasing a finger from the tuning knob, the input voltage applied to the IC302 pin #3 becomes zero, and the transistors Q305 and Q306 are turned on. The Q305 causes the T-Locked indicator (LED #2) to illuminate, and the Q306 allows the AFC signal issued from the IC101 #7 pin to be applied to the base of the transistor Q307. As has been mentioned in the paragraph (a) above, the transistors Q308 and Q307 function as a differential amplifier, and the AFC signal is applied to the base of Q307, while the reference signal is applied to the base of Q308. Difference between these two signals is obtained at the collector of Q309, and it is fed back to the front end for controlling the local oscillation frequency in such a manner that the difference between the reference signal and AFC signal can be minimized. As a result, a stabilized state, that is, the locked state is achieved. In actual receiver operation however, the LED #2 will not illuminate immediately after releasing finger from the tuning knob: it will illuminate after a certain period of delay. This because a time constant circuit consisting of a capacitor C328 and a resistor R339 is adopted in the circuit.

ADDITIONAL DESCRIPTION ON CIRCUIT

Please refer to page 3 on Block Diagram and page 14 on Schematic Diagram. The electric circuit of this unit consists of four PCB (Printed Circuit Board), a power transformer, various switches and so on. The main PCB are altogether, which are respectively called Tuner-EQ (Equalizer) PCB, Main Amp. PCB and REG (Regulator) PCB. The following are the outline of each PCB assembly.

Tuner-EQ PCB

This PCB incorporates the following circuit block, which are FM Front End, FM IF Block, FM MPX (Multiplex) Block, T-Locked System Block, Muting Control Block, Muting Circuit Block, AM Tuner Block and Phono EQ Block.

1. FM Front End

Using three staged variable capacitor, with 300 ohms Balanced Type and 75 ohms Unbalanced Type antenna inputs.
The top stage RF Amplifier incorporates high PG (Power Gain) and low NF (Noise Figure) FET. The clapp oscillator assures stable local oscillation. The resonance circuit of the local oscillator incorporates the varicap diode which enables to change the oscillation frequency by the AFC signal controlled by T-Locked System.

2. FM IF Block

It incorporates two transistors, one IC and two ceramic filters. The IC (HA11225) performs amplification, limitting, quadrature FM demodulation, muting level detection and operation of Tuning and Signal meters.

www.hifiengine.com

3. FM MPX Block

It incorporates one transistor and one IC. The transistor (Q301) suppresses the subsonic noise when de-tuned. The IC (TA7624P) is PLL (Phase Locked Loop) MPX IC. Which assures the high S/N and low distortion, incorporating PLL VCO Circuit, MPX Demodulator, Pilot Autocancel Circuit, Stereo/Monaural Automatic Switch Circuit, Stereo Lamp Driver, two Post Amplifiers and Stabilized Power Supply Circuit. It this block, the input signal is once demodulated to stereo and output from the IC, which is then input to the post amplifier of the same IC through the De-emphasis Circuit and Muting Circuit Block.

4. T-Locked System

Refer to Circuit Description on page 4.

5. Muting Control, Muting Circuit

The Muting Control Block consist of a C-MOS Digital IC (μPD4069C) which incorporates 6 inverters and CR parts. The main feature of this Block is the two Schmidt Trigger Circuits consisting of two inverters, which function is to switch on and off the transistor of the Muting circuit Block mentioned hereafter.

The Muting Circuit Block consists of three transistors and CR parts, of which two transistors (Q303, 304) short the demodulator output of FM MPX Block and ground to perform muting. The other transistor (Q302) shorts the operation signal of Q303 and 304 and ground so as muting is not performed when the switch is set ON. When the FM antenna input becomes weaker than a certain level, the FM IF Block outputs muting signal. This signal triggers one Schmidt Trigger Circuit, which output switches Q303 and 304 on to perform muting. This Schmidt Trigger Circuit output is also connected to the IC of FM IF Block. So muting is performed on the IC output as well. However, when the Selector Switch is set on FM MONO, muting is not performed since Q302 is set ON. Thus FM is still heard when the input signal is weak. The input of the other Schmidt Trigger Circuit is connected the Selector. When the Selector is set at AM, PHONO or AUX, the power supply is connected to the Schmidt Trigger Circuit through Selector, and makes Q303 and 304 on to perform muting over the FM output. When the Selector is set to FM AUTO instead of AM or FM MONO instead of PHONO, the output of the Schmidt Trigger Circuit is set off after certain interval which is determined by the value of the capacitor (C330) and the resister (R349) connected to its input. Therefore, muting is cancelled from the FM output a little after the Selector is switched. In the reverse operation of the Selector, the FM output immediately receives muting operation since there is little interval and AM or PHONO signal appears in the output stage. These circuits all function in order to eliminate the noise caused by switching the Selector.

6. AM Tuner Block

It incorporates two staged variable capacitor, one IC and one dual elements ceramic filter. The IC (IC201, HA1197) incorporates RF Amplifier, Converter, IF Amplifier, Detector and AGC Circuit.

7. Phono EQ Block

This is a two stage direct coupling amplifier, incorporating two transistors each in both channels. Carefully selected CR parts assures minimum deviation for the RIAA curve.

Main Amp PCB

This PCB consists of Power Amplifier and Tone Control Circuit. The Power amplifier has direct coupled pure complementary OCL circuit which incorporates the differential amplifier at the top stage. The dual transistor differential amplifier of the top stage amplifies the input signal and stabilizes the center voltage of the power stage. The next stage constructs Darlington Circuit with Q703 and Q707 (Q704, 708 = R ch.), functioning as a pre-driver and Q705 gives bias to the power stage. The semifixed resistor which is connected to the base determines the idling current. This transistor (Q705) which is thermally connected to the heat sink of the power transistor, also stabilizes the circuit operation. The final stage is the Darlington Pure Complementary OCL Circuit incorporating a mold package power transistor. Tone Control Circuit is incorporated in the Negative Feedback Circuit of the power amplifier and it aquires turn-over and roll-off characteristics respectively in high and low range by varying the negative feedback values of each range by BASS and TREBLE Controls.

REG PCB

This PCB consists of Rectifier Circuit and its regulation Circuit. The Rectifier Circuit is a bridge type full-wave rectifier circuit and provides direct current of "+" and "–" to the ground. The transistor Q801 and 803 are constant voltage power supply circuit and function also as a ripple filter. The Q802 is ripple filter.

Antenna Circuit

The coil (L201) and the capacitor (C119) are incorporated within the antenna circuit in order to utilize the signal which is caught by the FM antenna during AM reception. AM signal goes through AM Tuner because the impedance of capacitor is big while the impedance of coil is small. In FM, on the contrary the capacitor's impedance is small whereas the coil's impedance is big, which renders the FM signal go through the Front End. FM antenna, therefore, can be used for AM reception without giving interference to the FM reception.

www.hifiengine.com

DISASSEMBLY

1. SIDE WOODS REMOVAL
   a. Remove six screws from both sides of the wooden covers.

2. METAL COVER REMOVAL
   a. Remove wooden covers from both sides.
   b. Remove six tapping screws from the top of the metal cover.

3. BOTTOM PLATE REMOVAL
   a. Remove wooden covers from both sides.
   b. Remove thirteen tapping screws (# 1 ~ # 13) (Photo 1) from the bottom of the unit.

4. FRONT PANEL REMOVAL
   a. Remove wooden covers and the metal cover.
   b. Remove two tapping screws (#1 and #2) shown in Photo 2 and three tapping screws (#14 ~ #16) shown in Photo 1.
   c. Lift the front panel away from the unit.

5. PANEL WINDOW & SUB PANEL REMOVAL
   a. Remove the front panel.
   b. Remove six knobs (SPEAKERS, BASS, TREBLE, VOLUME, BALANCE, SELECTOR) from the front of the unit by pulling them forward.
   c. Remove four tapping screws (#1 ~ #4) shown in Photo 3.

6. REFLEX PLATE REMOVAL
   a. Remove four lamps in accordance with Photo 4.
   b. Remove two screws (#1 and #2) shown in Photo 4.

7. LED PC BOARD REMOVAL
   a. Push the center of push rivet (#1 and #2) (Photo 5) by small screw driver as shown Fig. 2.
   b. Pull the push rivet forward. LED PC board is now free to be pulled off.

8. METERS REMOVAL
   a. Remove two clamp springs (#3 and #4) and pull two meters (SIGNAL and TUNING) backward shown in Photo 5.

9. DIAL SCALE REMOVAL
   a. Remove the reflex plate, LED PC board and two meters.
   b. Remove four tapping screws (#5 ~ #8) shown in Photo 3.

10. POWER TRANSFORMER (WITH BRACKET AND FUSE) REMOVAL
    a. Disconnect all the power transformer cables.
    b. Remove three tapping screws (#5 ~ #7) (Photo 5) from the back plate.
    c. Remove two tapping screws (#8 and #9) (Photo 5) from the side angle.
    d. Lift the power transformer away from the unit.

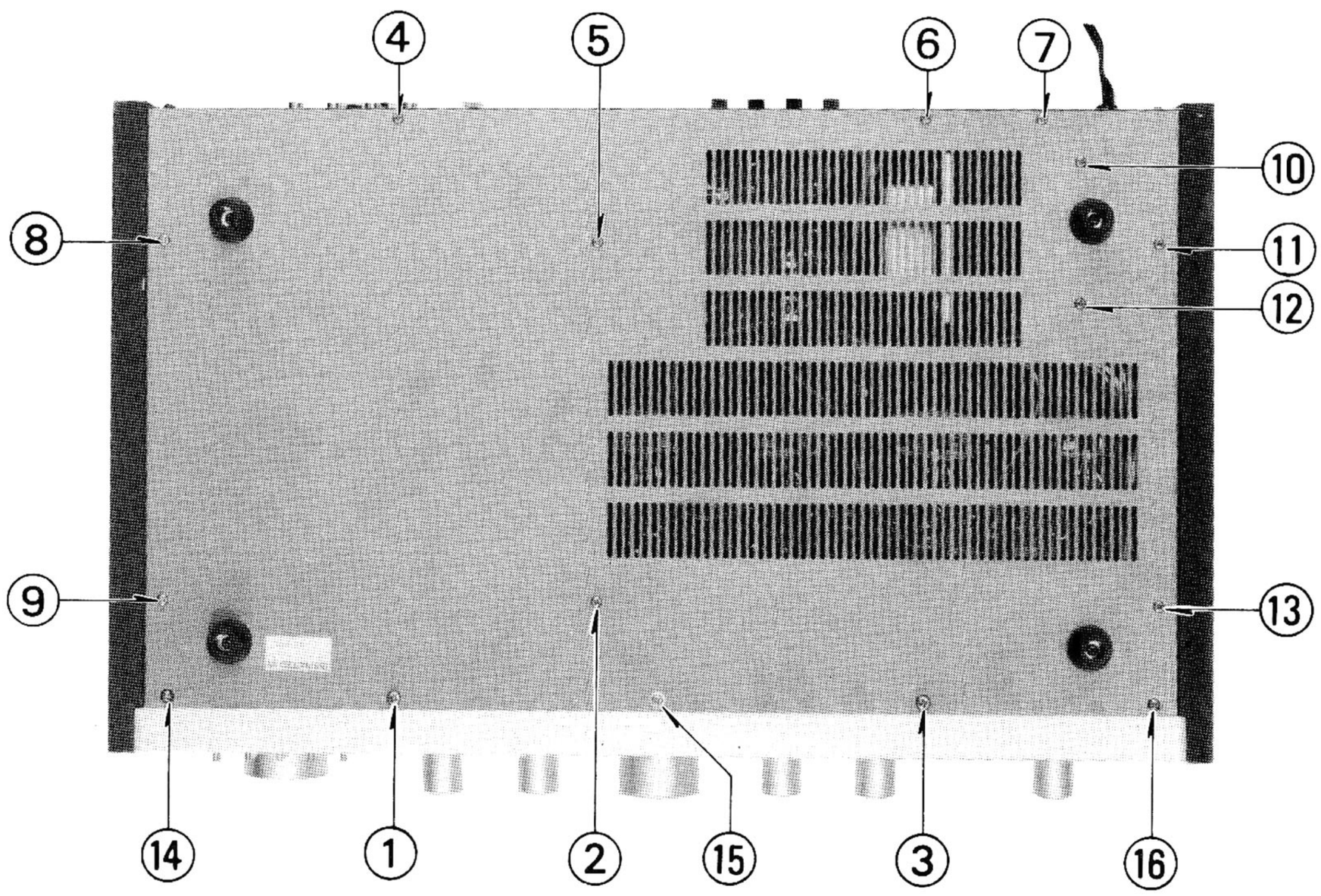

Photo 1

www.hifiengine.com

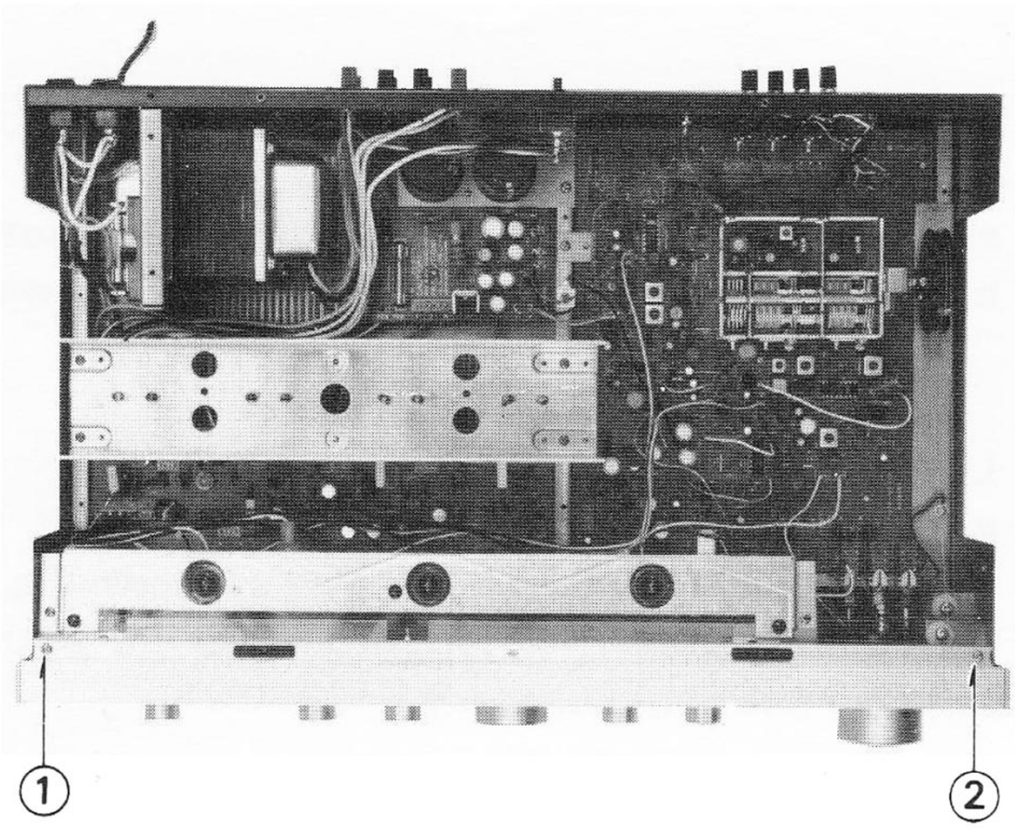

Photo 2

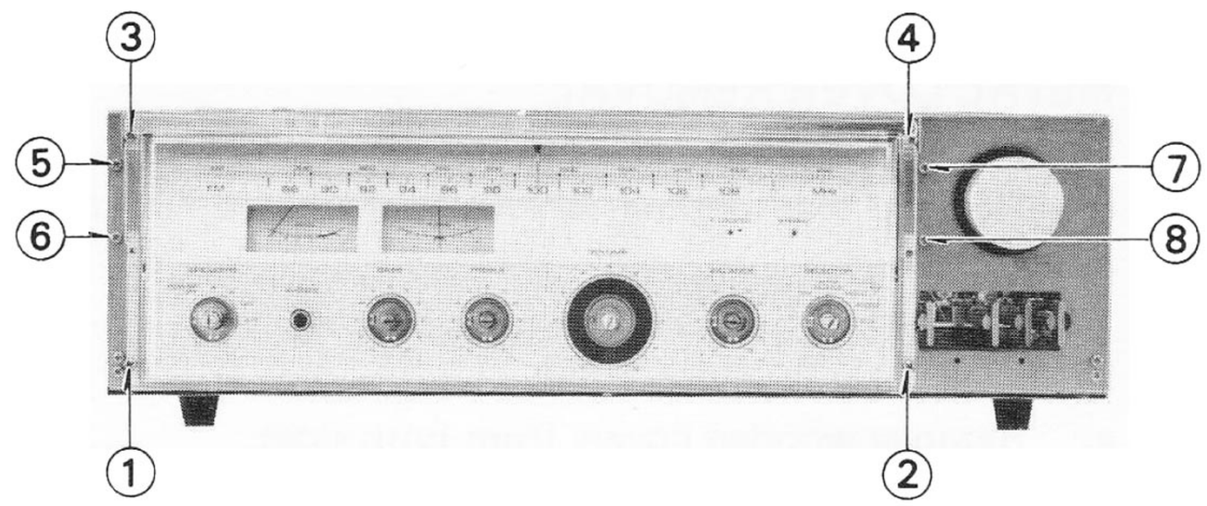

Photo 3

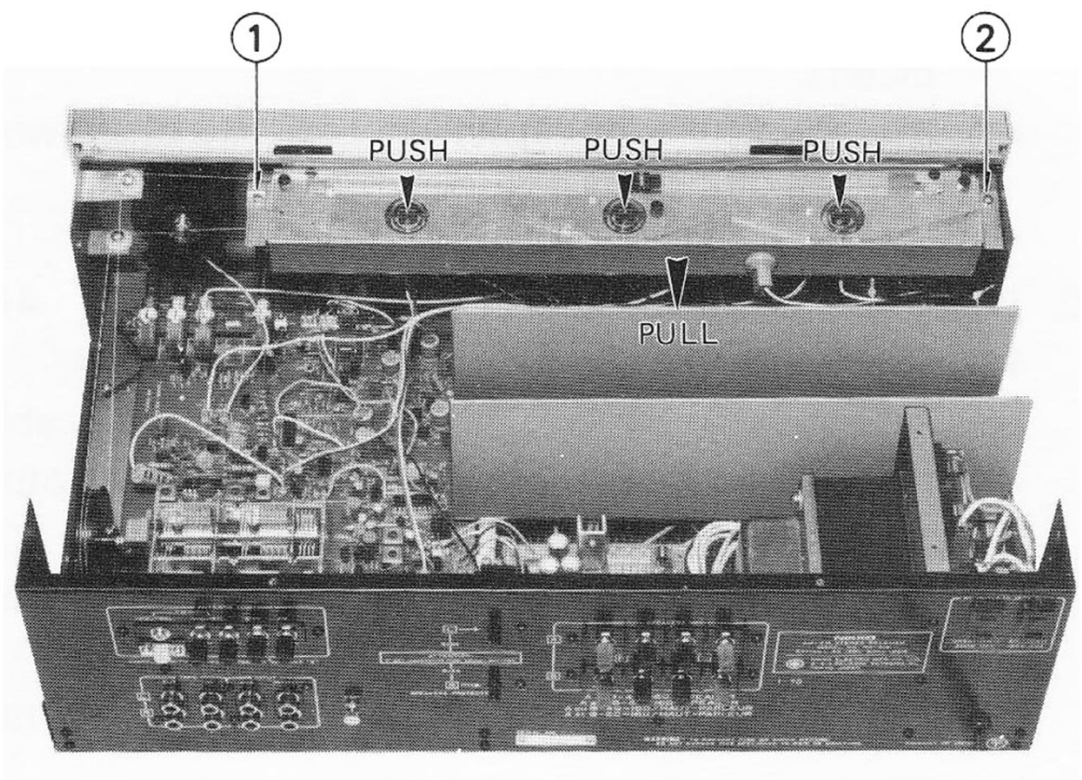

Photo 4

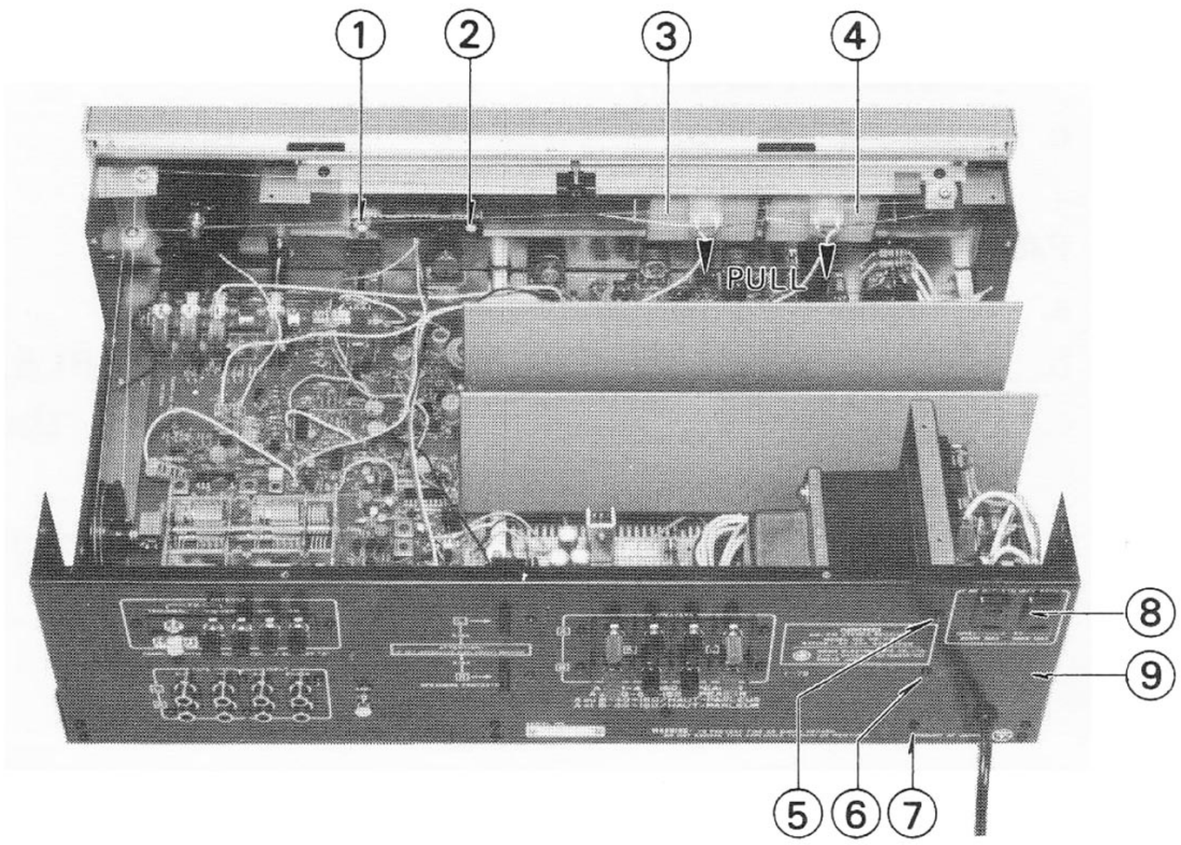

Photo 5

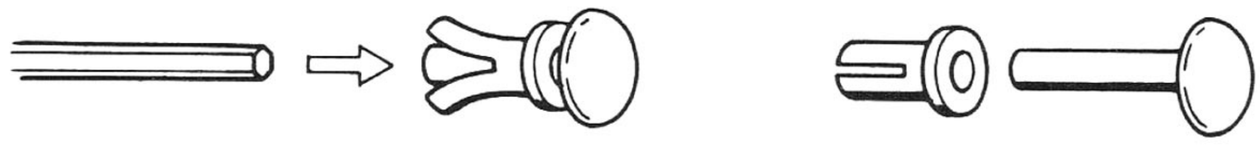

Figure 2 PUSH RIVET

www.hiflengine.com

ALIGNMENT

TEST EQUIPMENT

Allow a minimum of 10 minutes warm-up for test equipment and the receiver to be tested.
Maintain rated line voltage.

- FM Signal Generator (FM SG)
- Oscilloscope
- AC Voltmeter
- Distortion Meter
- MPX Signal Generator (MPX SG)
- Frequency Counter
- AM Sweep Generator (AM SG)
- DC Voltmeter

GENERAL ALIGNMENT INSTRUCTION

Always observe response curve on oscilloscope during alignment procedure:

1. Do not apply signal from FM or AM stations. Apply signals only.
2. Use of excessive signal from FM SG or AM SG can cause overloading of the tuner circuits. To properly align the receiver, adjust FM SG or AM SG output level control so that response curve on oscilloscope is not distorted.
3. Turn the volume controls down to the fully counter clockwise when the dummy load resistors or speakers are not connected to the speaker terminal.

FM SECTION

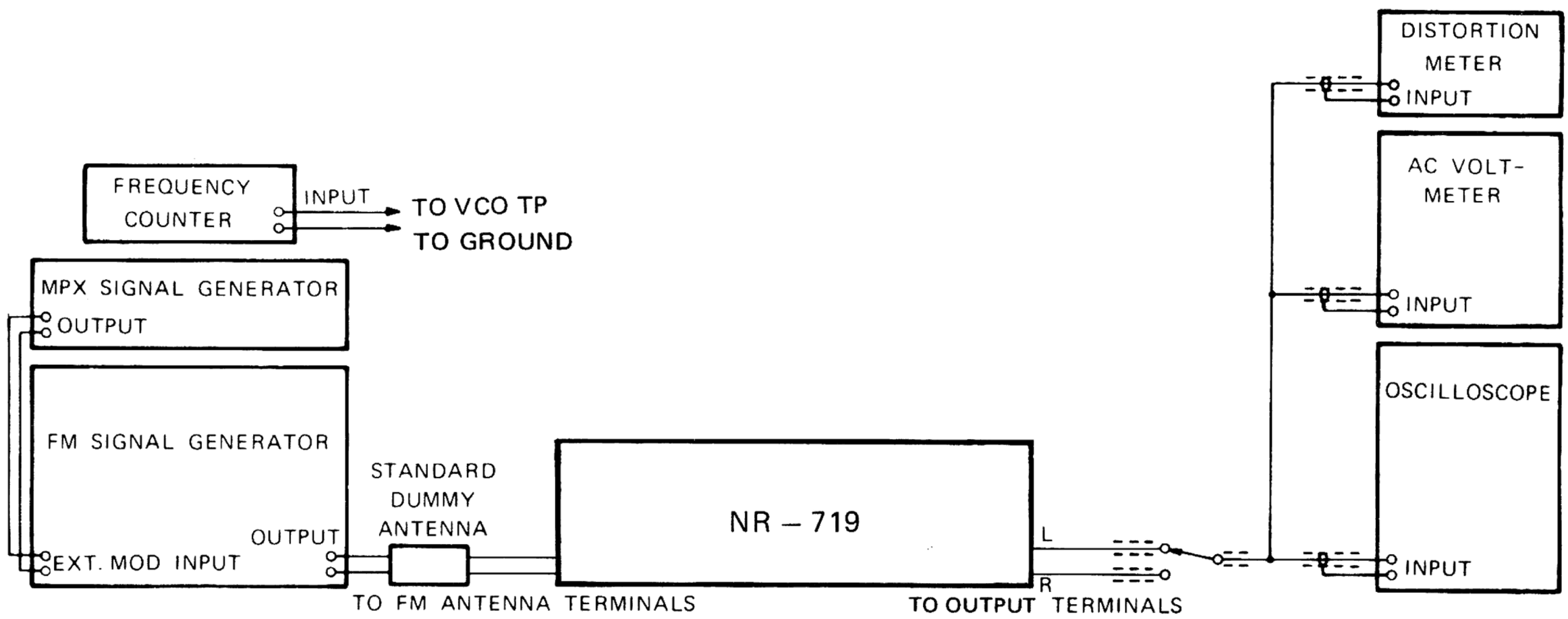

Figure 3. Test Equipment Hook-up

FM IF Alignment

STEP	FM SG FREQUENCY/ CALIBLATION	MODULATING FREQUENCY/ DEVIATION	SWITCHES OF THE RECEIVER	DIAL POINTER POSITION	ADJUST-MENT POINT	PROCEDURE	REMARKS
1			A. POWER to "ON". B. SELECTOR to "FM MONO".			Temporarily connect the wiring terminal #18 of the Tuner EQ PCB and the wiring terminal #2 of the REG PCB by clip lead.	This is to prevent operation of T-Locked System.
2				Where no signal is tuned.	T101 (Figure 4)	Adjust until tuning meter indicates mid-scale.	Repeat steps 2 and 3 until distortion can no longer be minimized.
3	98 MHz/60 dBμ	400 Hz/mono [±75 KHz]		98 MHz	T102 (Figure 4)	Adjust for minimum distortion.	
4						Remove the clip lead which was temporarily connected in the step 1. Confirm that T-Locked Indicator is lighted and Tuning Meter indicates mid-scale.	Do not touch the Tuning Knob.

Table 1 – 1

www.hifiengine.com

Figure 4 Adjustment point
TUNER EQ PCB
(Top view)

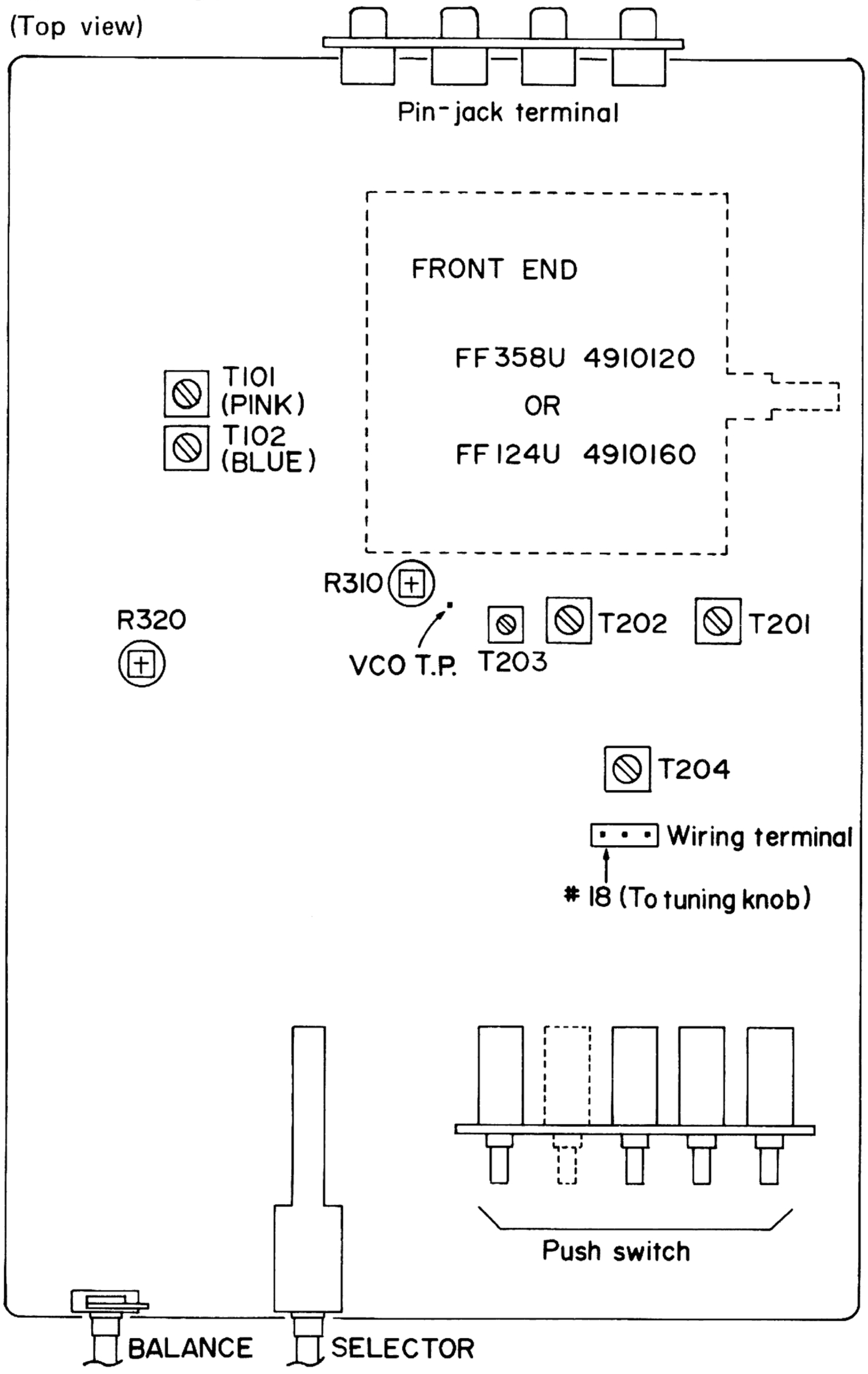

Figure 5-a
FRONT END FF358U P#4910120

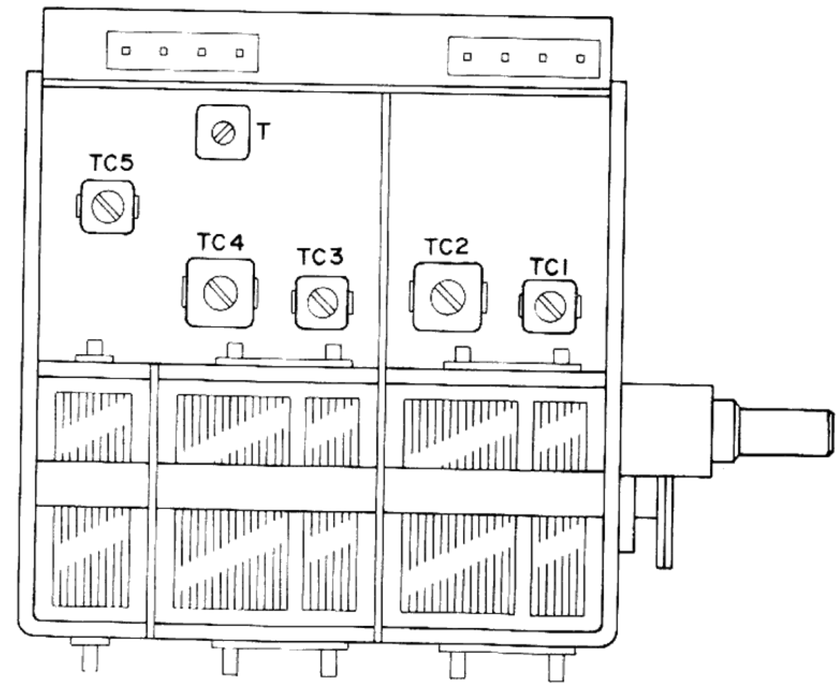

Figure 5-b
FRONT END FF124U P#4910160

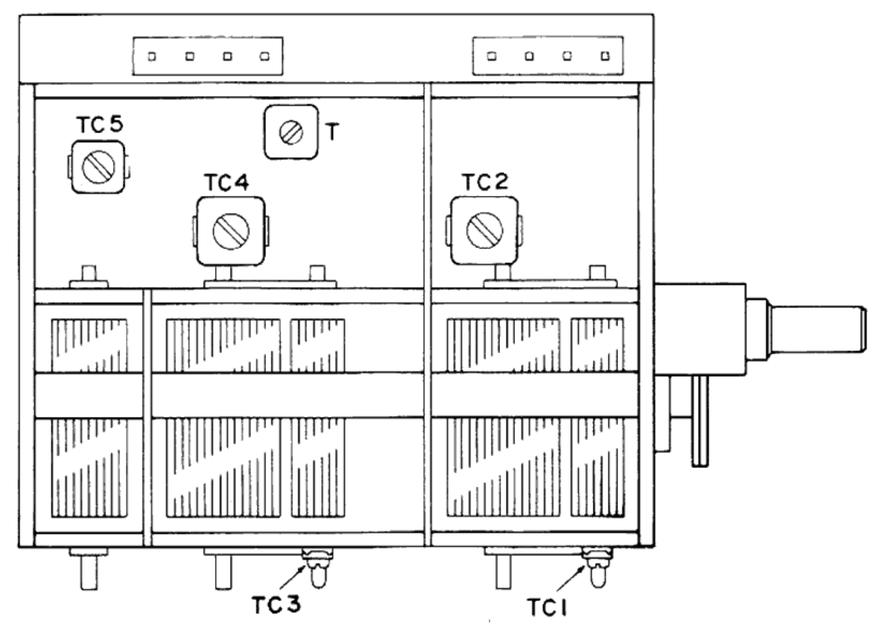

www.hifiengine.com

FM Frequency Coverage and FM Tracking Alignments

These adjustments are factory preset and normally need no further adjustment.
However, if necessary proceed as follows:

STEP	FM SG FREQUENCY/ CALIBLATION	MODULATING FREQUENCY/ DEVIATION	SWITCHES OF THE TUNER	DIAL POINTER POSITION	ADJUST-EMNT POINT	PROCEDURE	REMARKS
1			A. POWER to "ON". B. SELECTOR to "FM MONO".			Temporarily connect the wiring terminal #18 of the Tuner EQ PCB and the wiring terminal #2 of the REG PCB by clip lead.	This is to prevent operation of T-Locked System.
	108 MHz/10 dBμ	400 Hz/mono [±75 KHz]		108 MHz	TC5 (Figure 5)	Adjust for maximum AC Voltmeter deflection and for mid-scale tuning meter indication.	
3	87.4 MHz ±500 KHz/10 dBμ			Low frequency end of the Dial Scale.		Make sure that FM SG signal can be received at this dial pointer position. (Change the FM SG frequency and confirm that it indicates 87.4 MHz ±500 KHz when the signal is received.)	Do not move the Dial pointer.
4	108 MHz/ Attenuate for response with 3% distortion.			108 MHz	TC1 TC3 (Figure 5)	Adjust for maximum output.	
5						Remove the clip lead which was temporarily connected in the step 1.	

Table 1 – 2

FM MPX Alignment

STEP	FM SG FREQUENCY/ CALIBLATION	MODULATING FREQUENCY/ DEVIATION	SWITCHES OF THE TUNER	DIAL POINTER POSITION	ADJUST-MENT POINT	PROCEDURE	REMARKS
1	98 MHz/60 dBμ	(Unmodulated carrier)	A. POWER to "ON" B. SELECTOR to "FM AUTO"	98 MHz (Set so that tuning meter indicates mid-scale)	R310 (Figure 4)	Adjust for 76 ± 0.2 kHz.	
2		1000 Hz/stereo [main (L) & sub (L): ±67.5 kHz/ pilot signal: ±7.5 kHz]			R320 (Figure 4)	Adjust for maximum separation (or minimum output of right channel).	Both the separations (both the outputs of right and left channel) should be equal.
3		1000 Hz/stereo [main (R) & sub (–R): ±67.5 kHz/ pilot signal: ±7.5 kHz]				Adjust for maximum separation (or minimum output of left channel).	

Table 1 – 3

www.hifiengine.com

AM SECTION

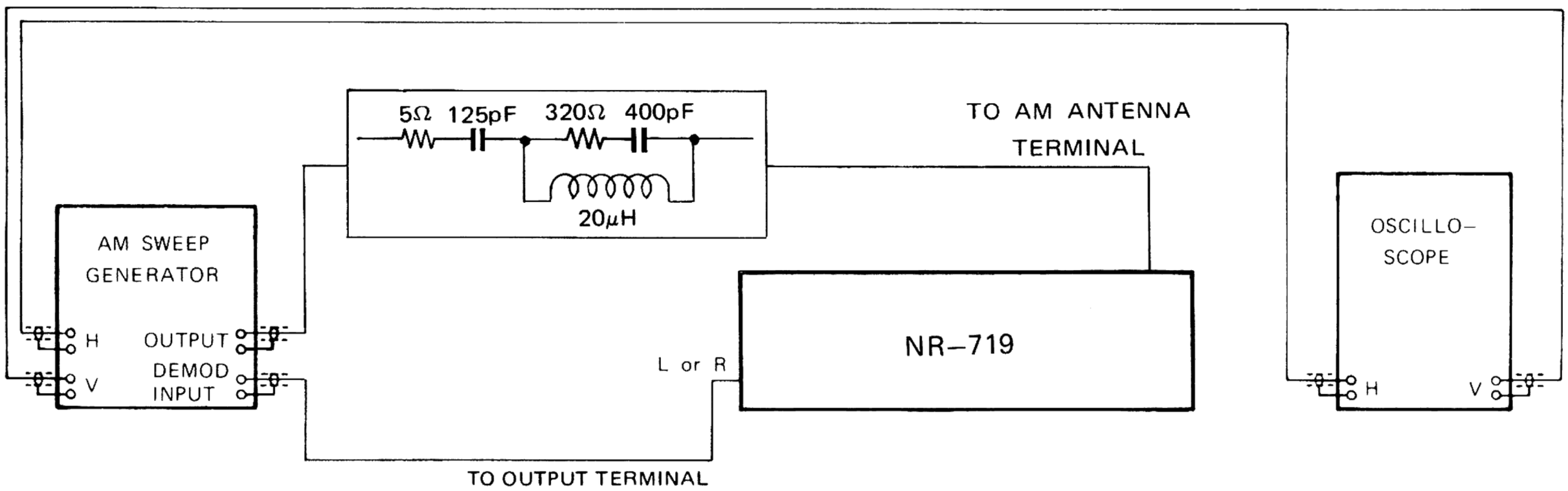

Figure 6. Test Equipment Hook-up

AM IF Alignment

STEP	AM SG FREQUENCY/ CALIBLATION		MODULATING FREQUENCY/ DEVIATION	SWITCHES OF THE TUNER	DIAL POINTER POSITION	ADJUST FOR MAX. SCOPE INDICATION	REMARKS
1	50 dBμ	Set AM SG IF/ RF switch to "IF" position.	(Unmodulated carrier)	A. POWER to "ON" B. SELECTOR to "AM"	High frequency end of the dial scale.	T203 (Figure 4, 7)	Repeat steps 1 and 2 until response curve on oscilloscope indicates maximum waveform.
2						T204 (Figure 4, 7)	

Table 2 – 1

AM Frequency Covorage and AM Tracking Alignment

These adjustments are factory preset and normally need no further adjustment.
However, if necessary proceed as follows:

STEP	AM SG FREQUENCY/ CALIBLATION		MODULATING FREQUENCY/ DEVIATION	SWITCHES OF THE TUNER	DIAL POINTER POSITION	ADJUST FOR MAX. SCOPE INDICATION	REMARKS
1	520 kHz/ 50 dBμ	Set AM SG IF/ RF switch to RF position.	400 Hz/30%	A. POWER to "ON" B. SELECTOR to "AM"	Low frequency end of the dial scale.	T202 (Figure 4, 8)	Repeat steps 1 and 2 several times.
2	1650kHz/ 50 dBμ				High frequency end of the dial scale.	TC4 (Figure 4, 8)	
3	600 kHz/ 50 dBμ				600 kHz	TC2 (Figure 4)	
4	1400kHz/ 50 dBμ				1400 kHz	T201 (Figure 4)	

Table 2 – 2

www.hifiengine.com

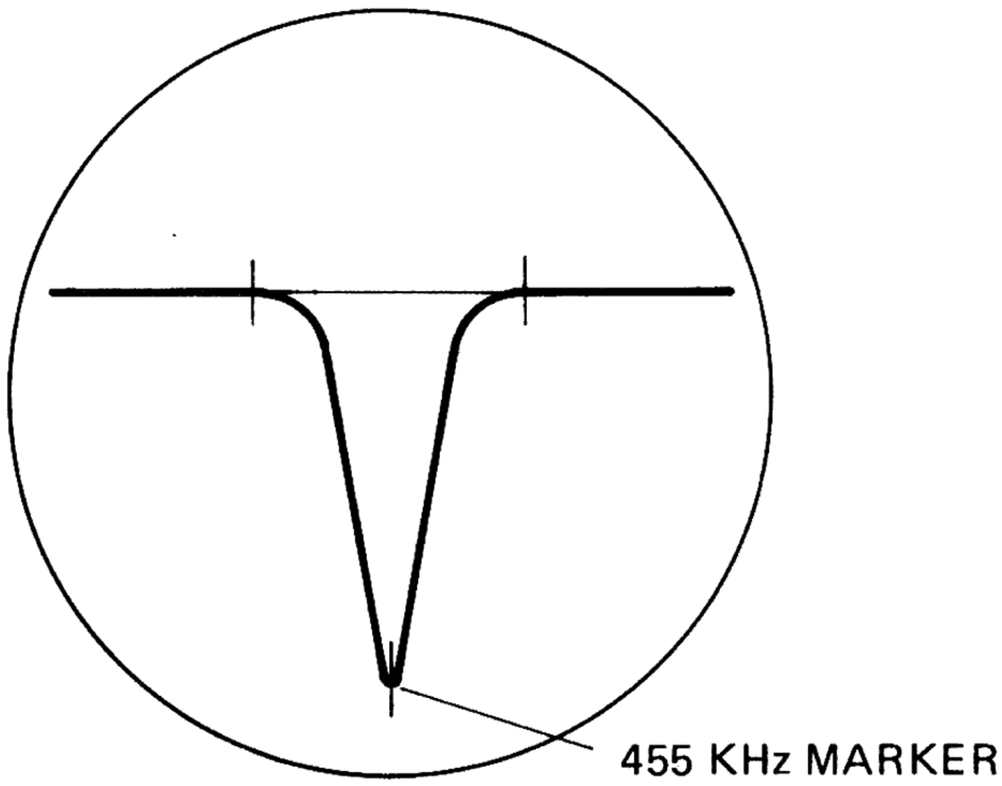

Figure 7. AM IF

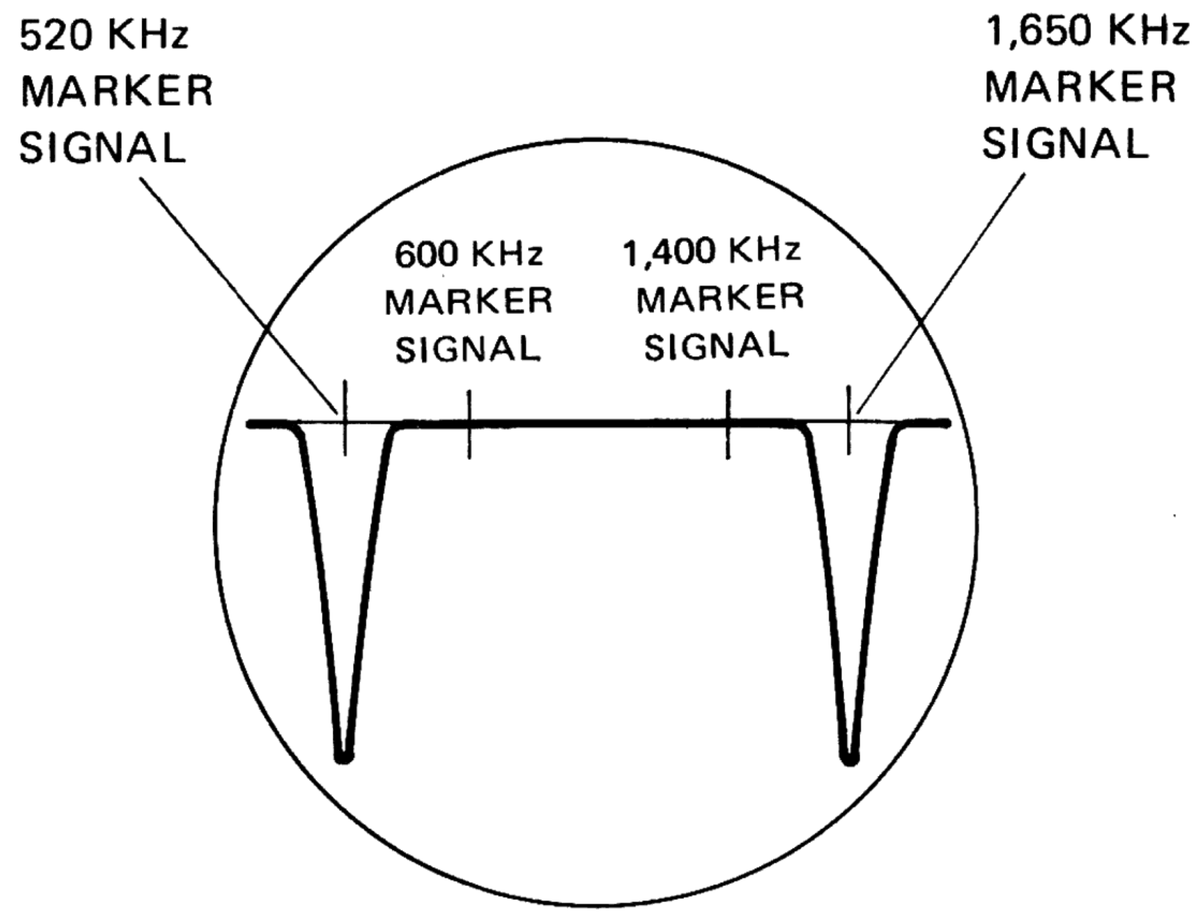

Figure 8. AM Frequency Coverage

MAIN AMP SECTION ADJUSTMENT

Idling Current Adjust

Connect 8 ohms dummy load to speaker terminals. Set volume controls to minimum (fully counterclockwise). Using high sensitivity DC voltmeter, adjust R727 so that the voltage difference between T. P. (near by Q713; 2SD586) and speaker terminal (left channel, + side) is 4.7 to 14.1 milivolts, or 9.4 milivolts average. Similarly, adjust R728 so that the voltage difference between T. P. (near by Q716; 2SB616) and speaker terminal (right channel, + side) is above value.

www.hifiengine.com

POWER TRANSISTORS MOUNTING ASSEMBLY

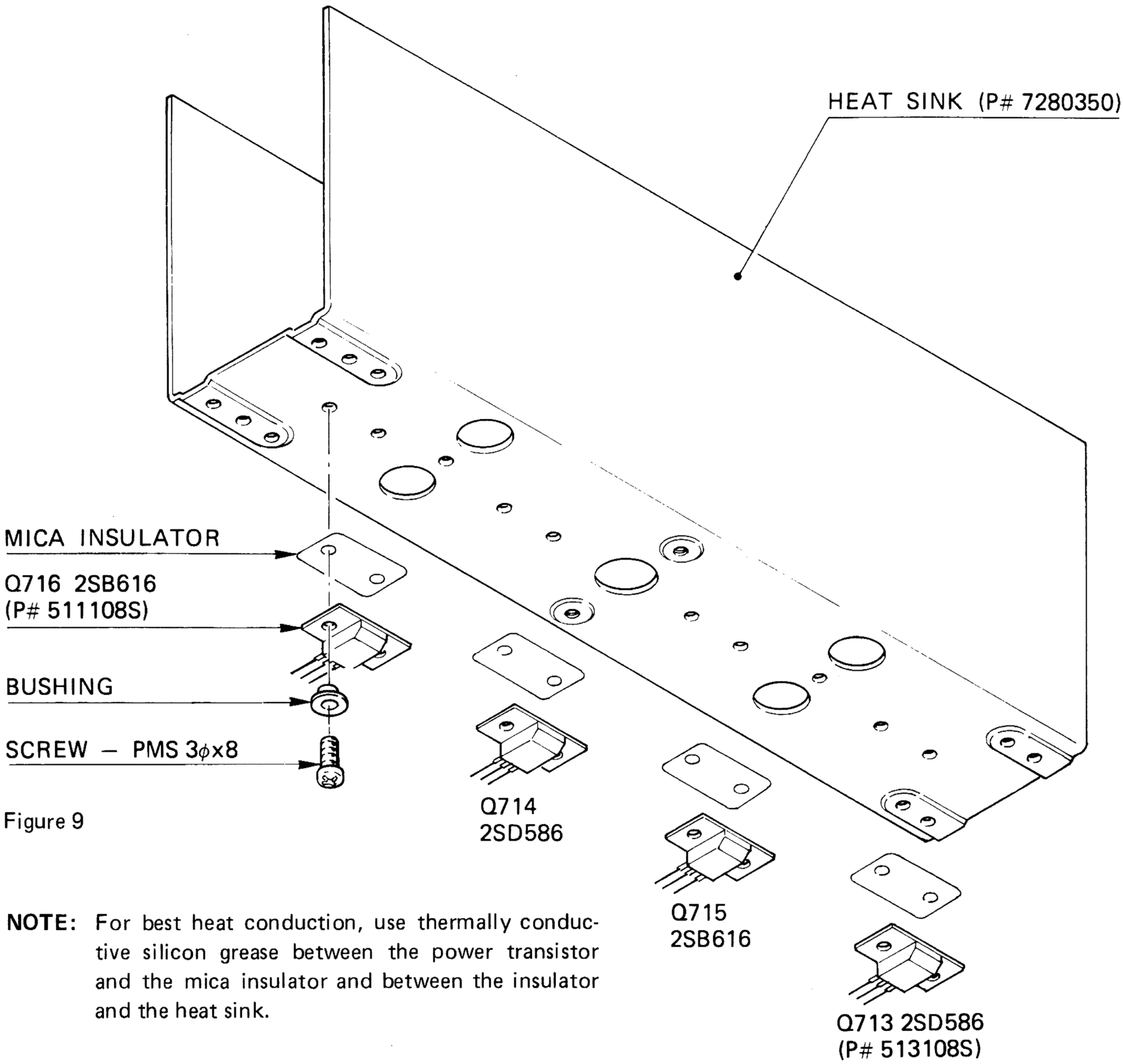

Figure 9

NOTE: For best heat conduction, use thermally conductive silicon grease between the power transistor and the mica insulator and between the insulator and the heat sink.

PRECAUTIONS FOR REPAIR SERVICE

Many of these items are included just as a reminder – they are normal procedures for experienced technicians. Short-cuts can be taken: but, often they cause additional damage to transistors, circuit components or the printed circuit board.

1. **Do not** bridge electrolytic capacitors with AC power. The resultant surges may damage solid state devices.
2. **Do not** bias the base of any transistor while voltage is being applied to its collector.
3. Replacements for output and driver transistors, if necessary, must be made from the same **hfe** group as the original type. Be sure to include this information when ordering replacement transistors.
4. If one output transistor burns out (open or shorts), always remove **all** output transistors in that channel and check the bias adjustment, the control and other parts in the network with an ohmmeter before inserting a new transistor. All output transistors in one channel will be destroyed if the base biasing circuit is open in the emitter end.
5. Replacement of transistors and components in the front-end, IF stage and multiplex decoder will not normally require realignment of these circuits, unless absolutely necessary. **Do not** attempt a realignment unless the required test equipment is available and the alignment procedure is thoroughly understood.

www.hifiengine.com

P.C. BOARD (BOTTOM VIEW)

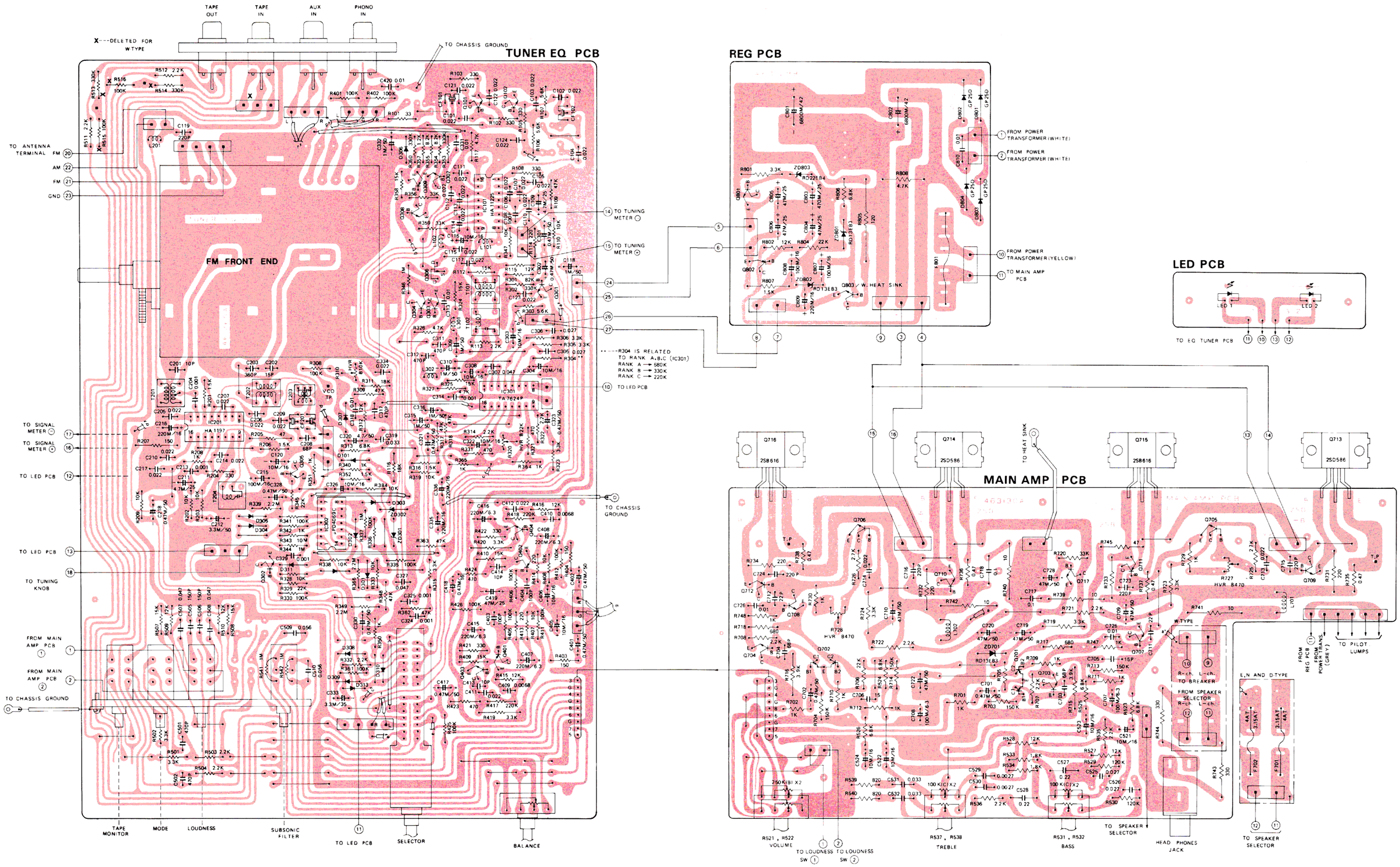

Figure 11

NOTICE

FRONT END

The circuit of new type front end, as follows.

FF124U

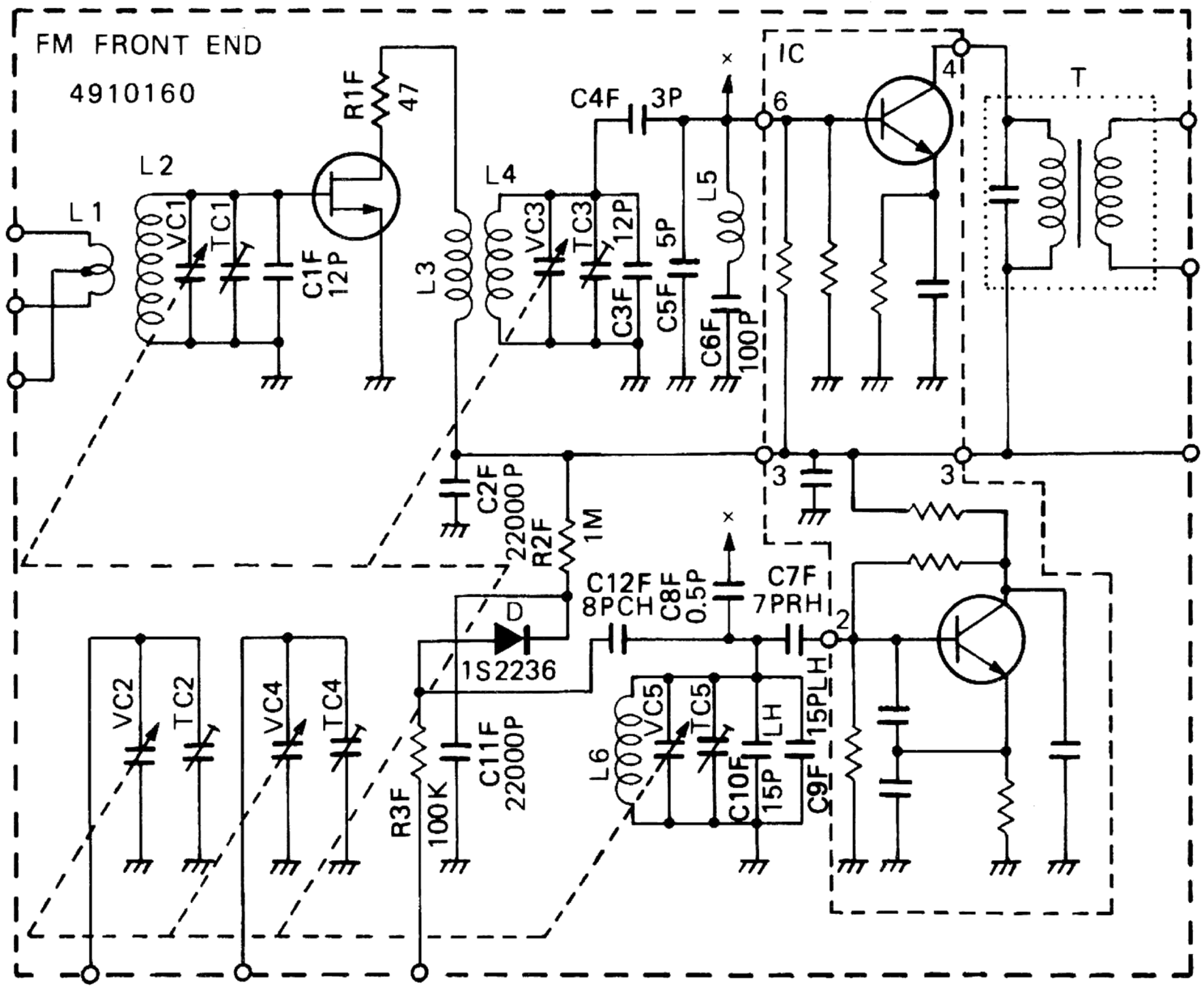

Figure 12

D–TYPE

The circuit and the parts of D–type are to be changed as follows.

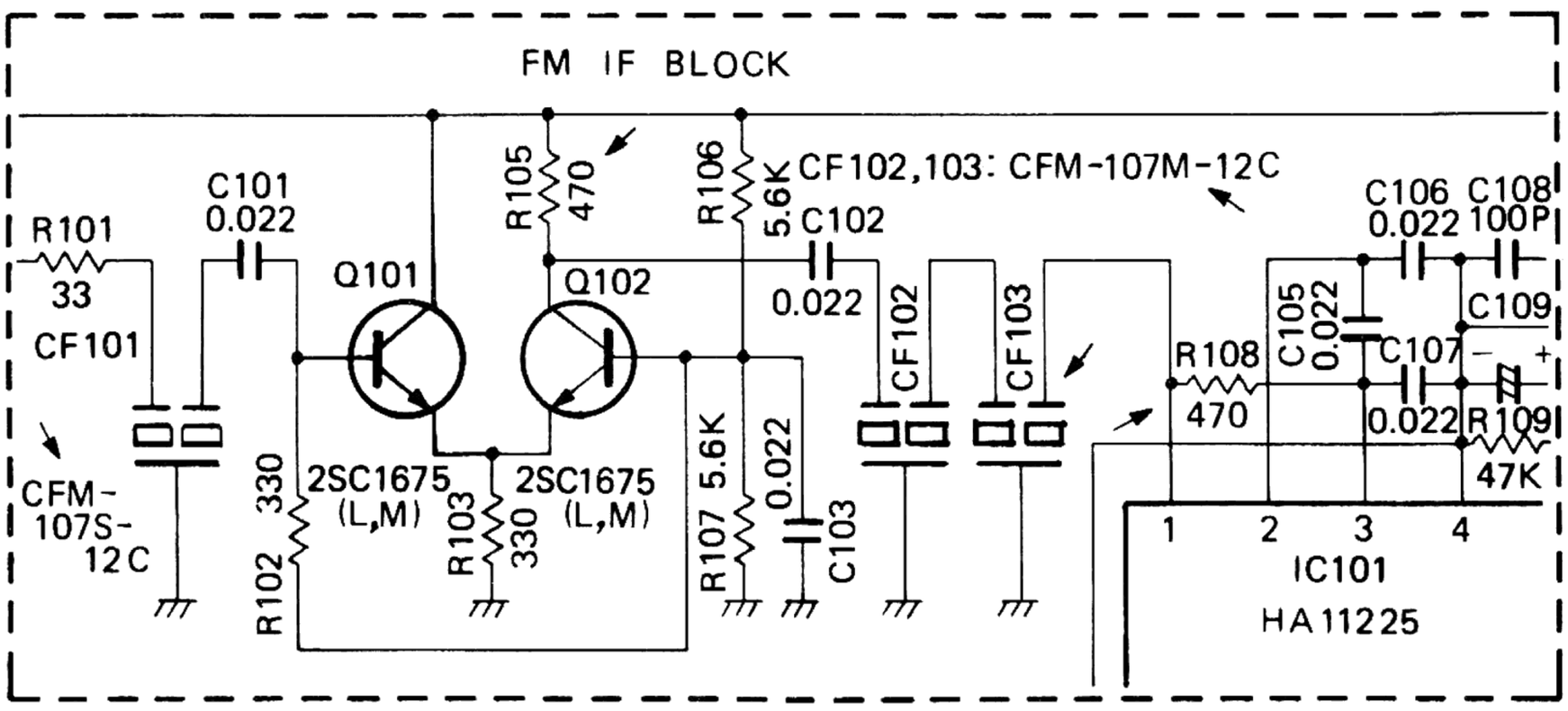

Figure 13

	SYMBOL No.	D – TYPE	W, E & N – TYPE
CERAMIC FILTER	CF 101	CFM – 107S – 12C	CFM – 107S – 12H
	CF 102		
	CF 103		NONE
CAPACITOR	C 104	NONE	C–CAP. 0.022
RESISTOR	R 105	470 OHMS	330 OHMS
	R 108		

www.hifiengine.com

DIAL CORD INSTALLATION

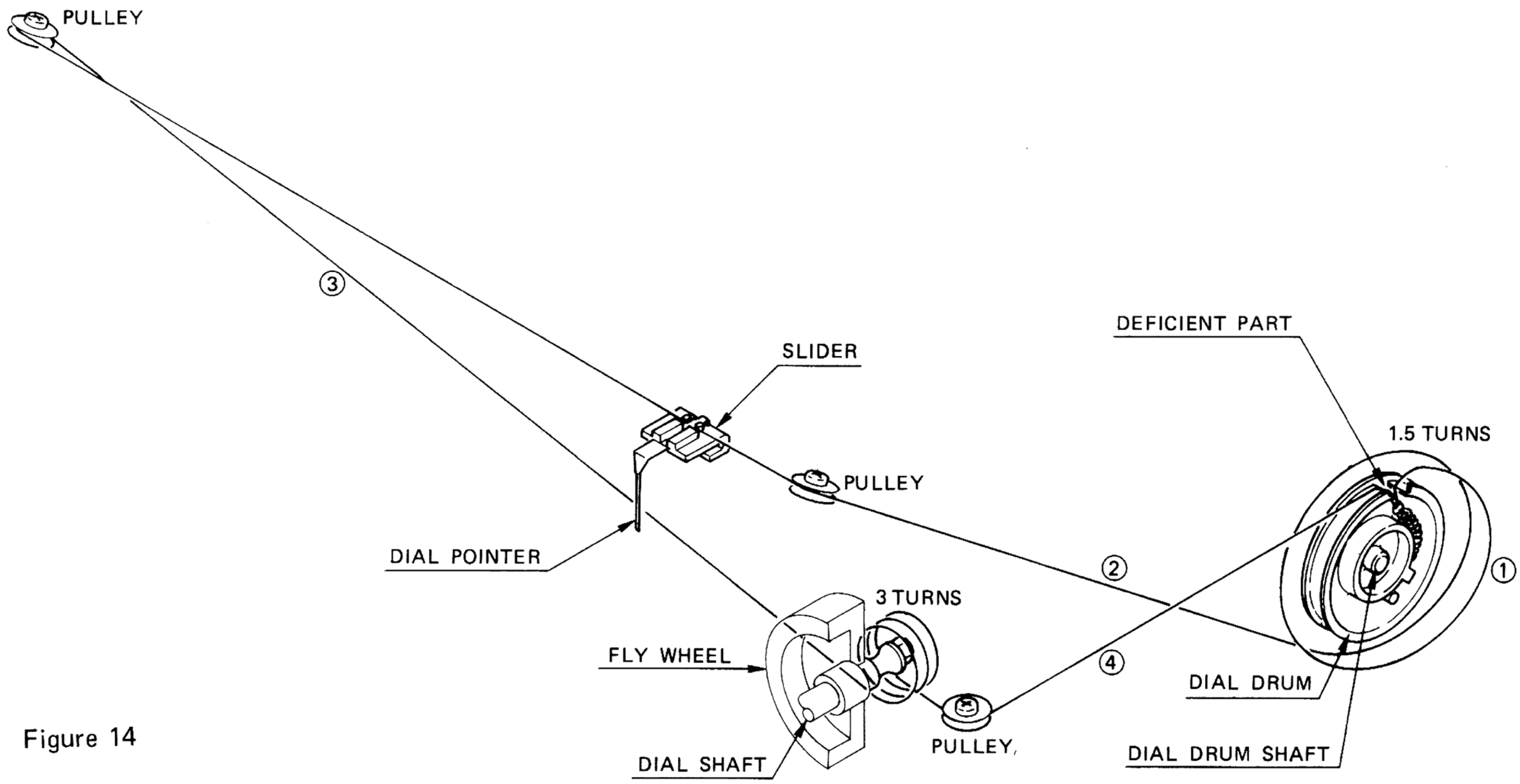

Figure 14

1. Remove an old dial cord.

2. Turn the dial drum shaft counter-clockwise until the rotor of the variable capacitor is completely out of the stator. If the deficient part of the dial drum is not in a straight line with the dial drum shaft (vertically), loosen the dial drum drive screws and adjust the dial drum to be placed on the top portion. Then re-tighten the dial drum screws.

3. String the dial drum and pulleys with a new dial cord in accordance with Fig. 14 (in circled numbered order).

4. Fix the dial pointer to the string and adjust to high frequency end (approx. 109.65 MHz) position when the rotor of the variable capacitor is completely out of the stator.

www.hifiengine.com

PARTS LOCATION

NOTE: Numbers of three digits with a ◯ are related to the KEY NUMBERS on parts list.

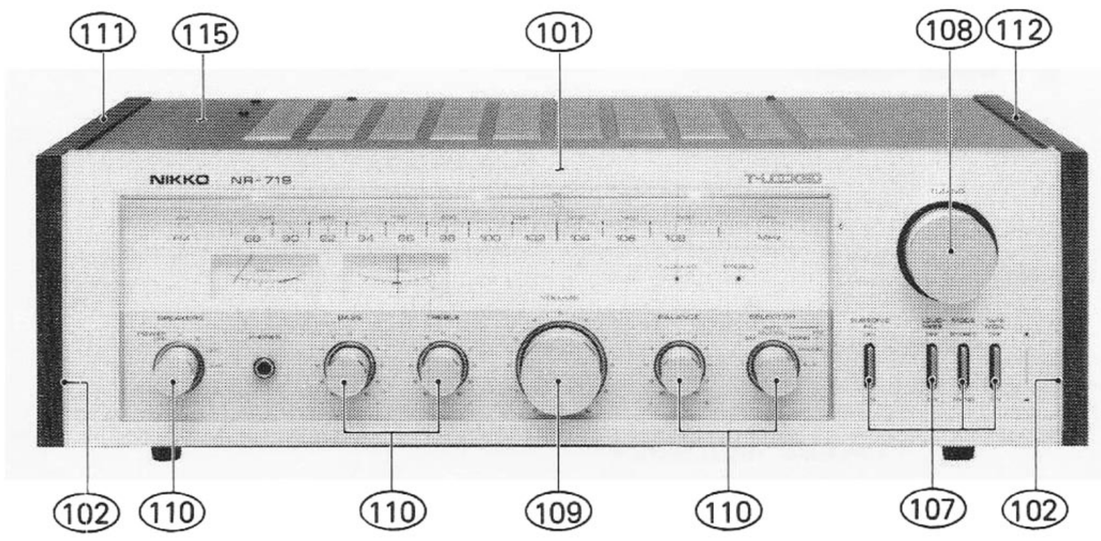

Photo 6

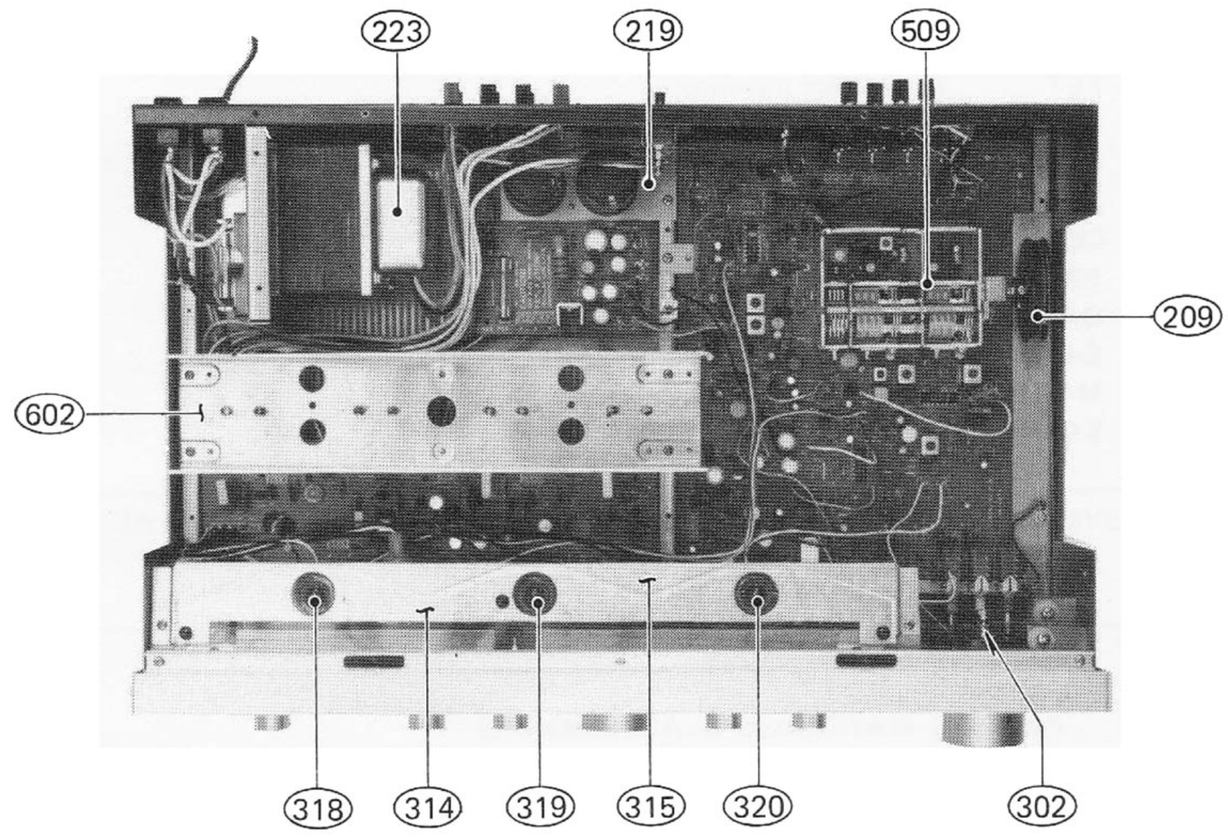

Photo 9

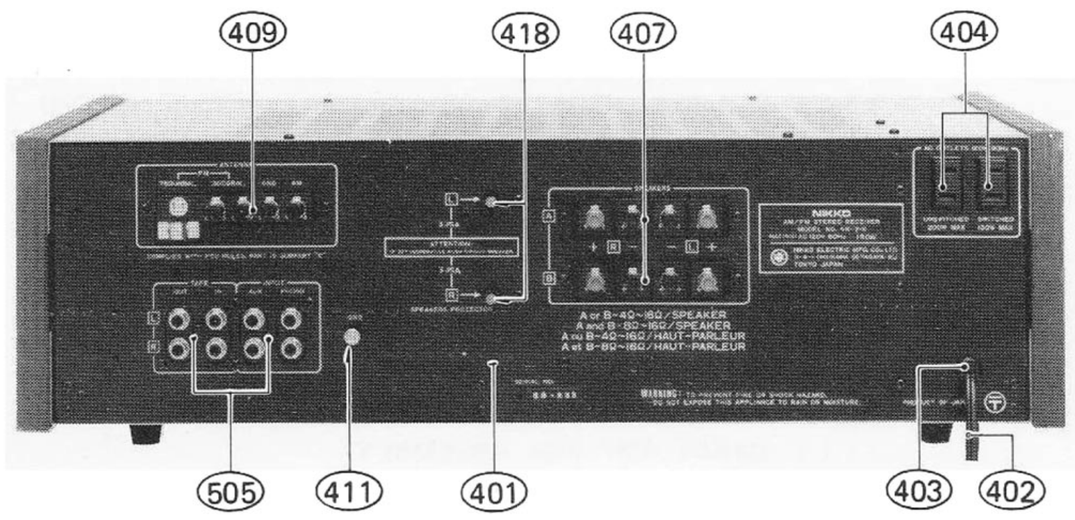

Photo 7

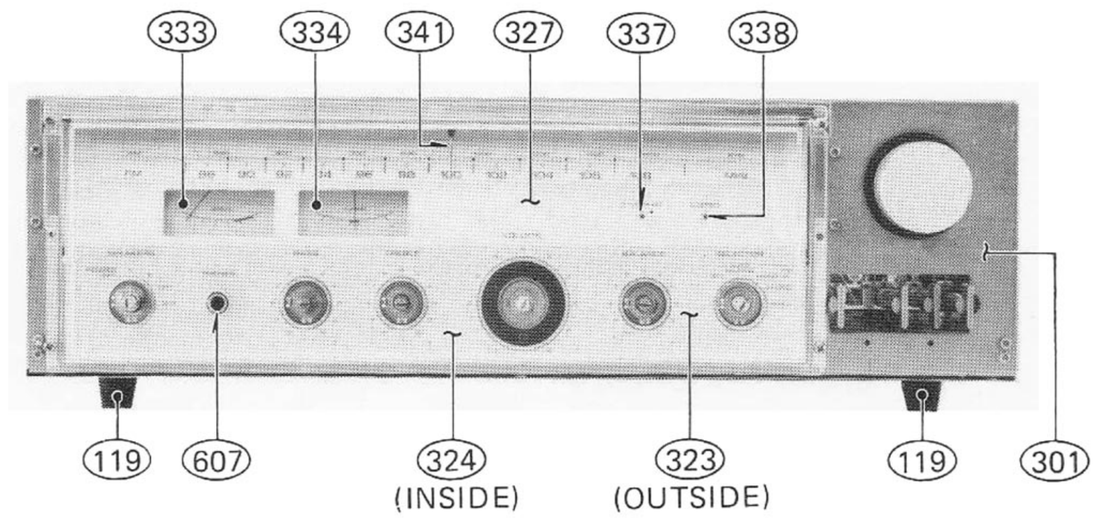

Photo 10

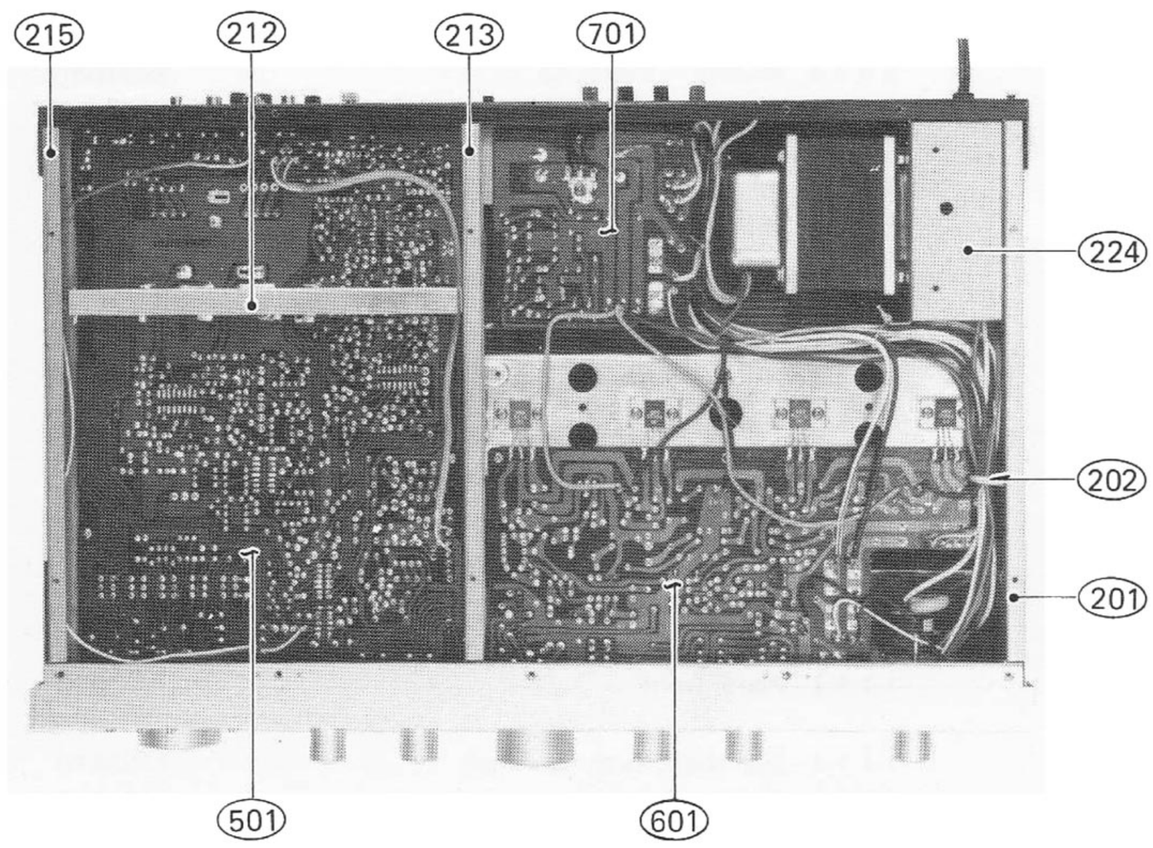

Photo 8

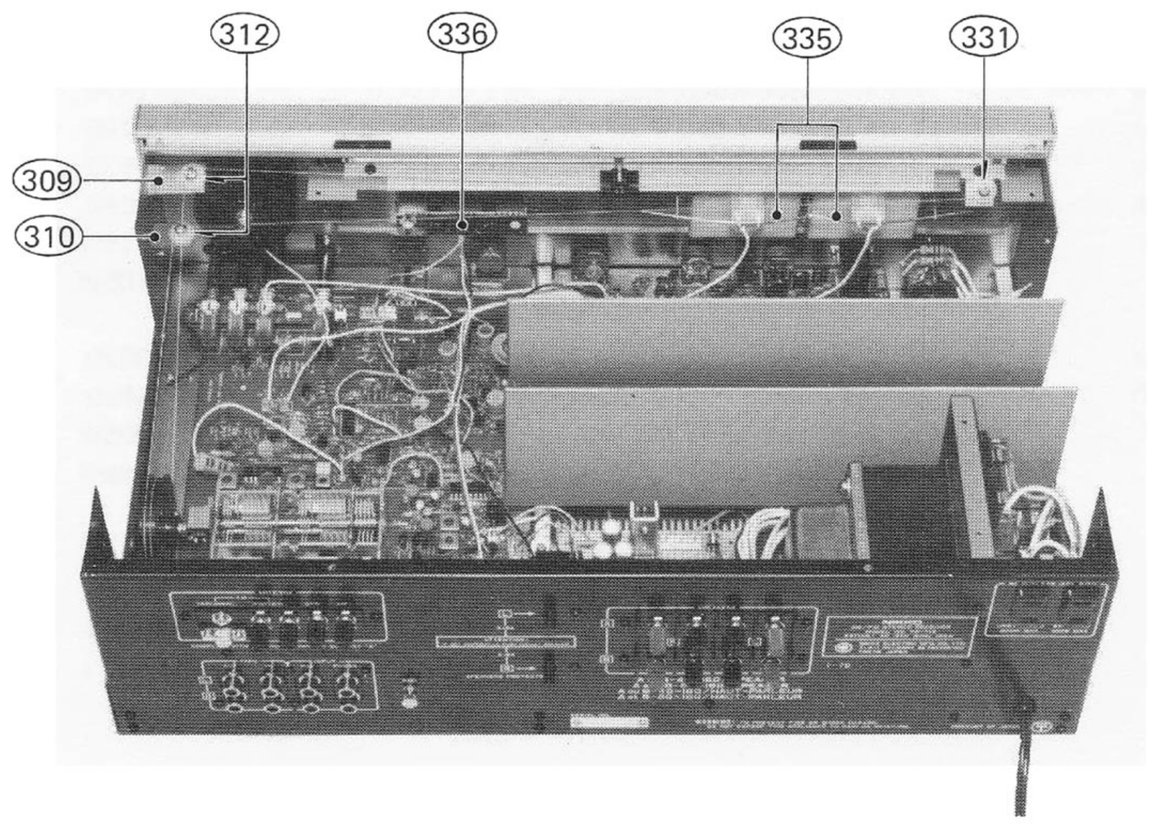

Photo 11

www.hifiengine.com

PARTS LIST

NOTES:

1. ★ The KEY NUMBER (#) marked with a (★) on parts list relate to numbers of three digits with a (◯). (Photo 6 ~ 11)

2. + Numberals in file indicate the quantity of parts used in one type.

3. ++ TR : Transistor
   FET : Field effect transistor
   VR : Volume control (Variable resistor)
   RES : Carbon film fixed resistor
   MO-RES : Metal oxide film fixed resistor
   CEM-RES : Cemented wirewound fixed resistor
   FP : Flame proof
   C-CAP : Ceramic capacitor
   E-CAP : Aluminium electrolytic capacitor
   M-CAP : Polyester film capacitor
   S-CAP : Polystyrene film capacitor
   T-CAP : Tantalum electrolytic capacitor
   BP-CAP : Bipolar electrolytic capacitor
   LC-CAP : Low current leakage electrolytic capacitor

4. Assemblies and parts are subject to change without notice.

5. Parts ordering procedure:
   A. Do NOT USE THE "KEY" NUMBER AND "SYMBOL" NUMBER. (these are control # for the factory only)
   B. Include in any order
      a. Part number.
      b. Part description.
      c. Model number.

      (any of the above lacking from an order may delay shipment of that order.)

KEY NO.	SYMBOL NO.	TYPE+ WEND	DESCRIPTION++	PART NO.
			PACKING MATERIALS & ACCESSORIES	
001		1 1 1 1	Carton box	9825520
002		2 2 2 2	Pad	9840800
003		1 1 1 1	Sack, polyethylen cloth	9640600
004		1 1 1 1	Cloth, polishing	9690040
005		1 1 1 –	Sack, polyethylen cloth – #13	9640320
006		– – – 1	Envelope – G	9690170
007a		1 – – –	Manual, instruction – E	960272E
007b		1 – – –	Manual, instruction – F, CANADA only	960292F
007c		– 1 1 –	Manual, instruction – K	960273K
007d		– – – 1	Manual, instruction – G	960289G
008		1 – – –	List, service stations	9690180
009a		1 – – –	Card, warranty	967007A
009b		1 – – –	Card, warranty – CANADA only	967028E
010		1 – – –	Post card	967008A
011		1 1 1 1	Drier – Silica gel	9690010
012		1 1 1 1	Antenna, FM – Q-MATCH	4581360
			CABINET ASSEMBLY	
★101		1 1 1 1	Panel, front	7884390
★102		2 2 2 2	Panel, both sides	7870370
103		2 2 2 2	Guide – P1320BK, for push buttons	7401670
104		1 1 1 1	Guide – P3320BK, for push buttons	7401680
105		2 2 2 2	Spacer, panel – P630	7401660
106		5 5 5 5	Screw – PTS 3ϕx6	814306S
★107		4 4 4 4	Button, push – P320GL – subsonic/ loudness/mode/tape monitor	7852020
★108		1 1 1 1	Knob – 19SL-42R – tuning	7841230
★109		1 1 1 1	Knob – 19SL-38DR – volume	7841240
★110		5 5 5 5	Knob – 19SL-19DR – others	7841250
★111a		1 1 1 –	Side wood – L	7831470
★112a		1 1 1 –	Side wood – R	7831480
★111b		– – – 1	Side wood – L, black	7831530
★112b		– – – 1	Side wood – R, black	7831540
113		8 8 8 8	Screw – TFTS 4ϕx16	887416W
114		8 8 8 8	Washer – 5ϕ	893105W
★115a		1 1 1 –	Cover, metal	7820920
★115b		– – – 1	Cover, metal, black	7820980
116		4 4 4 4	Screw – PTS 3ϕx6	814306W
117		2 2 2 2	Screw – PTS 3ϕx8	814308W
★118		1 1 1 1	Plate, bottom	7325420
★119		4 4 4 4	Foot, polyethylen	7901170
120		4 4 4 4	Screw – PTS WH3ϕx6	7121130
121		11111111	Screw – PTS 3ϕx6	814306S

KEY NO.	SYMBOL NO.	TYPE+ WEND	DESCRIPTION++	PART NO.
			CHASSIS ASSEMBLY	
★201		3 3 3 3	Angle	7226790
★202		1 1 1 1	Clip, wire	7401340
203		1 1 1 1	(FRONT PLATE ASSEMBLY)	
204		6 6 6 6	Screw – PTS 3ϕx6	814306S
205		1 1 1 1	(BACK PLATE ASSEMBLY)	
206		6 6 6 6	Screw – PTS 3ϕx6	814306S
207		1 1 1 1	(TUNER-EQ PCB ASSEMBLY)	
208		4 4 4 4	Screw – PTS 3ϕx6	814306S
★209		1 1 1 1	Dial drum – 50ϕ	7401020
210		1 1 1 1	Spring, dial drum – (J)	7440290
211		1 1 1 1	Cord, dial	4581870
★212		1 1 1 1	Angle, for variable capacitor	7032690
★213		1 1 1 1	Bracket, for PCB	7032310
214		5 5 5 5	Screw – PTS 3ϕx6	814306S
★215		1 1 1 1	Bracket, for PCB – R	7226870
216		1 1 1 1	(MAIN AMP PCB ASSEMBLY)	
217		4 4 4 4	Screw – PTS 3ϕx6	814306S
218		1 1 1 1	(REGULATOR PCB ASSEMBLY)	
★219		1 1 1 1	Holder, for regulator PCB	7032470
220		3 3 3 3	Screw – PTS 3ϕx6	814306S
221		1 1 1 1	Washer – TW(I) 3ϕ	893403U
222		1 1 1 1	Lug, ground – 4P WP	4400100
★223a		1 – – –	Transformer, power – T-1-344 – 120V only	1103440
★223b		– 1 1 1	Transformer, power – T-1-345 – 220/240V class II	1103450
★224a		1 – – –	Holder, power transformer	7226910
★224b		– 1 1 1	Holder, power transformer	7226800
225		4 4 4 4	Washer – IN 4ϕ	892014S
226		4 4 4 4	Washer – TW(I) 4ϕ	893404U
227		2 2 2 2	Screw – PTS 3ϕx6	814306S
228a		1 – – –	Fuse – 3A 250V MGC	4700630
229a		1 – – –	Holder, fuse – 1P	4581840
230		1 – – –	Screw – PTS 3ϕx8	814308S
228b		– 1 1 1	Midget fuse – (S) 1.6AT 250V	4720360
229b		– 1 1 1	Holder, midget fuse – 1P	4581430
231		– 1 1 1	Screw – PTS 3ϕx6	814306S
232		1 1 1 1	Tye, nylon	7401880
			FRONT PLATE ASSEMBLY	
★301		1 1 1 1	Plate, front	7325410
★302		1 1 1 1	Dial shaft, with fly wheel	7152410
303		1 1 1 1	Holder, dial shaft	7401700
304		3 3 3 3	Screw – PTS 3ϕx6	814306S

www.hifiengine.com

PART ORDERING PROCEDURE ----- Do NOT USE THE "KEY" NUMBER AND "SYMBOL" NUMBER. (these are control # for the factory only.) Include in any order: a. Part number, b. Part description, c. Model number. (any of the above lacking from an order may delay shipment of that order.)

KEY NO.	SYMBOL NO.	TYPE+ WEND	DESCRIPTION++	PART NO.
305		1 1 1 1	Washer – SN 9ϕ	892249S
306		1 1 1 1	Washer – TW(I) 9ϕ	893409U
307		1 1 1 1	Washer – 9ϕ	893109S
308		1 1 1 1	Lug – 9S	7032320
★309		1 1 1 1	Bracket, pulley – (T)	7032440
★310		1 1 1 1	Bracket, pulley – (B)	7032450
311		2 2 2 2	Screw – PTS 3ϕx6	814306S
★312		2 2 2 2	Pulley – 9ϕ	7400790
313		2 2 2 2	Shaft, pulley – 4L	7120980
★314		1 1 1 1	Reflex plate	7870330
★315		1 1 1 1	Holder, reflex plate	7227010
316		3 3 3 3	Rivet, push – 3ϕx6.5	7401850
317		2 2 2 2	Screw – PTS 3ϕx6	814306S
★318		2 2 2 2	Lamp – 8V 0.3A 200L	5808140
★319		1 1 1 1	Lamp – 8V 0.3A 300L	5808120
★320		1 1 1 1	Lamp – 8V 0.3A 400L	5808150
321		2 2 2 2	Tye, nylon	7401880
322		1 1 1 1	Spacer, panel window	**7032880**
★323		1 1 1 1	Window, panel	7870390
★324		1 1 1 1	Panel, sub	7802390
325		4 4 4 4	Screw – BLTS 3ϕx6	874306S
326		2 2 2 2	Cushion, sub panel	7002140
★327a		1 ---	Dial scale (OLD)	7802400
★327b		1 1 1 1	Dial scale (NEW)	7802450

CAUTION: Dial scale and Front End are related to each other. Each production lot has different Front End for this model. The units of the following serial numbers incorporate the old type Front End, FF358U and also the old type Dial Scale.

Serial # D7910001 -- D7912000

Serial # A7912001 -- A7913200

The rest of the units all have the new type Front End, FF124U and the new type Dial Scale. Pay good attention when changing parts.

328		1 1 1 1	Holder, dial scale	7226880
329		2 2 2 2	Rivet, push – 3ϕx3.5	7401190
330		4 4 4 4	Screw – PTS 3ϕx6	814306S
★331		1 1 1 1	Pulley – 9ϕ	7400790
332		1 1 1 1	Shaft, pulley – 4L	7120980
★333		1 1 1 1	Meter, signal	**4582490**
★334		1 1 1 1	Meter, tuning	**4582500**
★335		2 2 2 2	Clamp spring, for meter	**7440410**
★336		1 1 1 1	(LED PCB SUB ASSEMBLY)	
337		1 1 1 1	LED GL-2PG1 – green – T-Lock indicator	5060080
338		1 1 1 1	LED GL-2AR1 – red – STEREO indicator	5060090
339		2 2 2 2	Spacer, LED	7903140
340		2 2 2 2	Rivet, push – 3ϕx4.5	7401240
★341		1 1 1 1	Needle – dial pointer	7050510
342		1 1 1 1	Slider, needle	7401630
343a	S1	1 ---	Switch, rotary – SR26FN 2-4-5 20KC TV-5 – power/speaker	4051230
343b	S1	-1 1 1	Switch, rotary – SRY2054 class II – power/speaker	4051250
344a	C1	1 ---	C-CAP 0.0047uf AC125V	239472C
344b	C1,C2	-2 2 2	C-CAP 0.0047uf AC250V	239472E
345	R2,R3	2 2 2 2	MO-RES 10ohm 5% 2W	362100F

BACK PLATE ASSEMBLY

★401a		1 ---	Plate, back – W	**7325490**
★401b		-1 1 1	Plate, back – E	**7325530**
★402a		1 ---	Plug/Cord – DP-70	606007A
★402b		-1 1 1	Plug/Cord – CEE-2T	600510A
★403a		1 ---	Stopper, cord – SR-3P-4	7400620
★403b		-1 1 1	Stopper, cord – SR-4N-4	7400690
★404		2 ---	Socket, AC outlet	4500150
405	R1	1 ---	RES 2.2 meg. ohm 5% ½W	325225K
406		1 ---	Lug, ground	4400000
★407		2 2 2 2	Terminal, speaker – screw type – HB	4450470
408		4 4 4 4	Screw – PTS 3ϕx8	814308W
★409a		1 1 1 -	Terminal, antenna	4450520
★409b		---1	Terminal, antenna	4450560
410		2 2 2 2	Screw – PMS 3ϕx6	810306W
★411		1 1 1 1	Nut, GND terminal	4400050
412		1 1 1 1	Screw – PMS 3ϕx12	810312S
413		1 1 1 1	Washer – IN 3ϕ	892013S
414		2 2 2 2	Washer – TW(I) 3ϕ	893403U
415		1 1 1 1	Lug, ground	4400000
416		-1 1 1	Connector, DIN type 5P	4530220
417		-2 2 2	Screw – PTS 3ϕx6	814306S
★418		2 ---	Circuit breaker – NW-2S(N) 3.15A	**4900870**
419		1 ---	Bracket, circuit breaker	**7032480**

TUNER-EQUALIZER PC BOARD ASSEMBLY

★501a		1 ---	TUNER-EQ PCB ASSEMBLY – FM de-emphasis 75us	**9460110**
★501b		-1 1 -	TUNER-EQ PCB ASSEMBLY – FM de-emphasis 50us	**9460120**
★501c		---1	TUNER-EQ PCB ASSEMBLY – D-type only	**9460160**
502	S1	1 1 1 1	Switch, rotary slide – SRZ-W45 – selector	4055170
503	S2~S6	1 1 1 1	Switch, tetra push – tape monitor/mode/ loudness/subsonic	**4041070**
504	R511	1 1 1 1	VR VM10E093C – 250kohm – balance	4310560
505		2 2 2 2	Terminal, RCA phono pin jack – 2Px2	4444070
506		1 1 1 1	Flat cable – 9-60	606212E
507		3 3 3 3	Lug, ground	4400000
508		1 1 1 1	Screw – PMS 3ϕx6	810306W
★509a		1 1 1 1	Front end – FF124U	4910160
★509b		1 ---	Front end – FF358U	4910120

CAUTION: Dial scale and Front End are related to each other. Each production lot has different Front End for this model. The units of the following serial numbers incorporate the old type Front End, FF358U and also the old type Dial Scale.

Serial # D7910001 -- D7912000

Serial # A7912001 -- A7913200

The rest of the units all have the new type Front End, FF124U and the new type Dial Scale. Pay good attention when changing parts.

(FM IF SECTION)

T101	1 1 1 1	Transformer, FM descriminator – (1)	1240340
T102	1 1 1 1	Transformer, FM descriminator – (2)	1240350
L101	1 1 1 1	Inductor – 22uh	1210930
L102	1 1 1 1	Inductor – 2.2uh	1210860
CF101,102	2 2 2 -	Celamic filter – CFM-107S-12H	128053A
CF101	---1	Celamic filter – CFM-107S-12C	128056A

www.hifiengine.com

PART ORDERING PROCEDURE ----- Do NOT USE THE "KEY" NUMBER AND "SYMBOL" NUMBER. (these are control # for the factory only.) Include in any order: a. Part number, b. Part description, c. Model number. (any of the above lacking from an order may delay shipment of that order.)

KEY NO.	SYMBOL NO.	TYPE+ WEND	DESCRIPTION ++	PART NO.
	CF102,103	---2	Celamic filter – CFM-107M-12C	128057A
	IC101	1 1 1 1	IC HA11225	518070S
	Q101,102	2 2 2 2	TR 2SC1675 (L or M)	515082S
	D101	1 1 1 1	Diode 1SS53	501023S
	C101 ~ C107	7 7 7 6	C-CAP 0.022uf +80, –20% 50V YG	231223Z
	C108	1 1 1 1	C-CAP 100pf 10% 50V SL	232101K
	C109	1 1 1 1	E-CAP 4.7uf 25V	211315Q
	C110 ~ C115	6 6 6 6	C-CAP 0.022uf +80, –20% 50V YG	231223Z
	C116	1 1 1 1	E-CAP 10uf 16V	211220Q
	C117	1 1 1 1	C-CAP 0.022uf +80, –20% 50V YG	231223Z
	C118	1 1 1 1	E-CAP 1uf 50V	211510Q
	C119	1 1 1 1	C-CAP 220pf 10% 50V SL	232221K
	C120	1 1 1 1	E-CAP 10uf 16V	211220Q
	C121 ~ C124	4 4 4 4	C-CAP 0.022uf +80, –20% 50V YG	231223Z
	R101	1 1 1 1	RES 33ohm 5% ¼W	328330J
	R102,103	2 2 2 2	RES 330ohm 5% ¼W	328331J
	R104		– DELETED –	
	R105	1 1 1 1	RES 330ohm 5% ¼W	328331J
	R106,107	2 2 2 2	RES 5.6kohm 5% ¼W	328562J
	R108	1 1 1 1	RES 470ohm 5% ¼W	328471J
	R109	1 1 1 1	RES 47kohm 5% ¼W	328473J
	R110	1 1 1 1	RES 10kohm 5% ¼W	328103J
	R111		– DELETED –	
	R112	1 1 1 1	RES 15kohm 5% ¼W	328153J
	R113	1 1 1 1	RES 2.2kohm 5% ¼W	328222J
	R114	1 1 1 1	RES 220ohm 5% ¼W	328221J
	R115	1 1 1 1	RES 12kohm 5% ¼W	328123J
	R116	1 1 1 1	RES 18kohm 5% ¼W	328183J
	R117	1 1 1 1	RES 4.7kohm 5% ¼W	328472J
			(MPX SECTION)	
	L301,302	2 2 2 2	Inductor – 39mh	1260130
	IC301	1 1 1 1	IC TA-7624P (Y or G or W)	518071S
	IC302	1 1 1 1	IC uPD4069C	518072S
	Q301 ~ Q305	5 5 5 5	TR 2SC945L (P or Q)	515077S
	Q306	1 1 1 1	FET 2SK104 (F)	516026S
	Q307,308	2 2 2 2	TR 2SC945L (P or Q)	515077S
	Q309	1 1 1 1	TR 2SA733 (P or Q)	514074S
	D301 ~ D313	13131313	Diode 1SS53	501023S
	ZD301	1 1 1 1	Zener diode RD2.2EC	502056S
	ZD302	1 1 1 1	Zener diode RD6.2EB1	502048S
	C301,302	2 2 2 2	E-CAP 0.47uf 50V	211505Q
	C303,304	2 2 2 2	E-CAP 10uf 16V	211220Q
	C305,306	2 ---	M-CAP 0.027uf 5% 50V	222273J
	C305,306	–2 2 2	M-CAP 0.018uf 5% 50V	222183J
	C307	1 1 1 1	M-CAP 0.0047uf 5% 50V	222472J
	C308	1 1 1 1	E-CAP 10uf 16V	211220Q
	C309,310	2 2 2 2	E-CAP 1uf 50V	211510Q
	C311,312	2 2 2 2	S-CAP 470pf 5% 50V	223471J
	C313,314	2 2 2 2	M-CAP 0.001uf 5% 50V	222102J
	C315,316	2 2 2 2	E-CAP 1uf 50V	211510Q
	C317	1 1 1 1	S-CAP 470pf 5% 50V	223471J
	C318	1 1 1 1	M-CAP 0.01uf 5% 50V	222103J
	C319	1 1 1 1	M-CAP 0.033uf 5% 50V	222333J
	C320	1 1 1 1	E-CAP 4.7uf 25V	211315Q
	C321	1 1 1 1	LC-CAP 0.47uf 50V	211505L
	C322	1 1 1 1	E-CAP 10uf 16V	211220Q
	C323	1 1 1 1	LC-CAP 0.47uf 50V	211505L
	C324,325	2 2 2 2	M-CAP 0.001uf 5% 50V	222102J
	C326	1 1 1 1	E-CAP 10uf 16V	211220Q
	C327	1 1 1 1	M-CAP 0.047uf 10% 50V	222473K
	C328	1 1 1 1	E-CAP 0.47uf 50V	211505Q
	C329	1 1 1 1	C-CAP 0.001uf +80, –20% 50V YG	231102Z
	C330	1 1 1 1	E-CAP 0.47uf 50V	211505Q
	C331	1 1 1 1	M-CAP 0.01uf 5% 50V	222103J
	C332	1 1 1 1	LC-CAP 1uf 50V	211510L
	C333	1 1 1 1	E-CAP 3.3uf 35V	211413Q
	C334	1 1 1 1	C-CAP 0.022uf +80, –20% 50V YG	231223Z
	C335,336	2 2 2 2	E-CAP 220uf 16V	211332Q
	R310	1 1 1 1	Potentiometer – SR19R B10kohm	4300510
	R320	1 1 1 1	Potentiometer – SR19R B22kohm	4301170
	R301	1 1 1 1	RES 82kohm 5% ¼W	328823J
	R302	1 1 1 1	RES 330kohm 5% ¼W	328334J
	R303	1 1 1 1	RES 5.6kohm 5% ¼W	328562J
		NOTE:	R304 is related to the rank of IC301 (TA-7624P). (See schematic diagram.)	
	R304	1 1 1 1	RES 220kohm 5% ¼W	328224J
	R304	1 1 1 1	RES 330kohm 5% ¼W	328334J
	R304	1 1 1 1	RES 680kohm 5% ¼W	328684J
	R305,306	2 2 2 2	RES 3.3kohm 5% ¼W	328332J
	R307		– DELETED –	
	R308	1 1 1 1	RES 100kohm 5% ¼W	328104J
	R309	1 1 1 1	RES 47kohm 5% ¼W	328473J
	R310		(Potentiometer)	
	R311	1 1 1 1	RES 18kohm 5% ¼W	328183J
	R312	1 1 1 1	RES 12kohm 5% ¼W	328123J
	R313	1 1 1 1	RES 6.8kohm 5% ¼W	328682J
	R314	1 1 1 1	RES 2.2kohm 5% ¼W	328222J
	R315	1 1 1 1	RES 3.3kohm 5% ¼W	328332J
	R316	1 1 1 1	RES 1.5kohm 5% ¼W	328152J
	R317,318	2 2 2 2	RES 47kohm 5% ¼W	328473J
	R319	1 1 1 1	RES 10kohm 5% ¼W	328103J
	R320		(Potentiometer)	
	R321	1 1 1 1	RES 470ohm 5% ¼W	328471J
	R322	1 1 1 1	RES 2.2kohm 5% ¼W	328222J
	R323	1 1 1 1	RES 3.3kohm 5% ¼W	328332J
	R324,325	1 1 1 1	RES 15kohm 5% ¼W	328153J
	R326,327	1 1 1 1	RES 4.7kohm 5% ¼W	328472J
	R328	1 1 1 1	RES 10kohm 5% ¼W	328103J
	R329	1 1 1 1	RES 22kohm 5% ¼W	328223J
	R330	1 1 1 1	RES 100kohm 5% ¼W	328104J
	R331	1 1 1 1	RES 470ohm 5% ¼W	328471J
	R332	1 1 1 1	RES 2.2kohm 5% ¼W	328222J
	R333,334	2 2 2 2	RES 10kohm 5% ¼W	328103J
	R335,336	2 2 2 2	RES 100kohm 5% ¼W	328104J
	R337	1 1 1 1	RES 1 meg. ohm 5% ¼W	328105J
	R338	1 1 1 1	RES 10kohm 5% ¼W	328103J
	R339	1 1 1 1	RES 2.2meg. ohm 5% ¼W	328225J
	R340	1 1 1 1	RES 1kohm 5% ¼W	328102J
	R341	1 1 1 1	RES 100kohm 5% ¼W	328104J
	R342	1 1 1 1	RES 1kohm 5% ¼W	328102J
	R343	1 1 1 1	RES 10meg. ohm 5% ¼W	328106J
	R344	1 1 1 1	RES 1 meg. ohm 5% ¼W	328105J
	R345	1 1 1 1	RES 22kohm 5% ¼W	328223J
	R346	1 1 1 1	RES 1 meg. ohm 5% ¼W	328105J
	R347	1 1 1 1	RES 10kohm 5% ¼W	328103J
	R348,349	2 2 2 2	RES 2.2meg. ohm 5% ¼W	328225J
	R350,351	2 2 2 2	RES 1kohm 5% ¼W	328102J
	R352	1 1 1 1	RES 1.5kohm 5% ¼W	328152J
	R353	1 1 1 1	RES 330kohm 5% ¼W	328334J
	R354,355	2 2 2 2	RES 8.2kohm 5% ¼W	328822J
	R356	1 1 1 1	RES 33kohm 5% ¼W	328333J
	R357	1 1 1 1	RES 1.2kohm 5% ¼W	328122J
	R358	1 1 1 1	RES 15kohm 5% ¼W	328153J
	R359	1 1 1 1	RES 33kohm 5% ¼W	328333J
	R360	1 1 1 1	RES 330kohm 5% ¼W	328334J
	R361	1 1 1 1	RES 100kohm 5% ¼W	328104J

www.hifiengine.com

PART ORDERING PROCEDURE - - - - - Do NOT USE THE "KEY" NUMBER AND "SYMBOL" NUMBER. (these are control # for the factory only.) Include in any order: a. Part number, b. Part description, c. Model number. (any of the above lacking from an order may delay shipment of that order.)

KEY NO.	SYMBOL NO.	TYPE+ WEND	DESCRIPTION++	PART NO.
	R362,363	2 2 2 2	RES 47kohm 5% ¼W	328473J
	R364,365	2 2 2 2	RES 1kohm 5% ¼W	328102J
	R366	1 1 1 1	RES 10meg. ohm 5% ¼W	328106J
			(AM SECTION)	
	T201	1 1 1 1	Coil, AM antenna	1200390
	T202	1 1 1 1	Coil AM oscillator	1220060
	T203	1 1 1 1	Transformer, AM IF	1230160
	T204	1 1 1 1	Coil, AM descriminator	1230110
	L201	1 1 1 1	Inductor – 2.2uh	1210860
	CF201	1 1 1 1	Celamic filter – SFZ455A	1280310
	IC201	1 1 1 1	IC HA1197	518044S
	C201	1 1 1 1	C-CAP 10pf 10% 50V SL	232100K
	C202	1 1 1 1	C-CAP 15pf 10% 50V SL	232150K
	C203	1 1 1 1	S-CAP 360pf 2% 50V	223361G
	C204	1 1 1 1	C-CAP 0.001uf +80, –20% 50V YG	231102Z
	C205 ~ C207	3 3 3 3	C-CAP 0.022uf +80, –20% 50V YG	231223Z
	C208	1 1 1 1	C-CAP 68pf 10% 50V SL	232680K
	C209,210	2 2 2 2	C-CAP 0.022uf +80, –20% 50V YG	231223Z
	C211	1 1 1 1	E-CAP 4.7uf 25V	211315Q
	C212	1 1 1 1	E-CAP 3.3uf 35V	211413Q
	C213	1 1 1 1	C-CAP 0.001uf +80, –20% 50V YG	231102Z
	C214	1 1 1 1	C-CAP 0.022uf +80, –20% 50V YG	231223Z
	C215	1 1 1 1	E-CAP 100uf 16V	211230Q
	C216	1 1 1 1	E-CAP 220uf 16V	211232Q
	C217	1 1 1 1	M-CAP 0.022uf 10% 50V	222223K
	C218	1 1 1 1	LC-CAP 0.47uf 50V	211505L
	R201	1 1 1 1	RES 1.5kohm. 5% ¼W	328152J
	R202,203	2 2 2 2	RES 10kohm 5% ¼W	328103J
	R204	1 1 1 1	RES 330ohm 5% ¼W	328331J
	R205	1 1 1 1	FP-MO-RES 47ohm 5% ½W	360470L
	R206	1 1 1 1	RES 1.5kohm 5% ¼W	328152J
	R207	1 1 1 1	FP-MO-RES 150ohm 5% ½W	360151L
	R208	1 1 1 1	RES 1kohm 5% ¼W	328102J
	R209	1 1 1 1	RES 10kohm 5% ¼W	328103J
			(EQ AMP SECTION)	
	Q401,402	2 2 2 2	TR 2SA991 (E or F)	510104S
	Q403,404	2 2 2 2	TR 2SC945L (P or Q)	515077S
	C401,402	2 2 2 2	LC-CAP 0.47uf 50V	211505L
	C403,404	2 2 2 2	C-CAP 100pf 10% 50V SL	232101K
	C405,406	2 2 2 2	E-CAP 10uf 16V	211220Q
	C407,408	2 2 2 2	E-CAP 220uf 6.3V	211032Q
	C409,410	2 2 2 2	M-CAP 0.0068uf 5% 50V	222682J
	C411,412	2 2 2 2	M-CAP 0.022uf 5% 50V	222223J
	C413,414	2 2 2 2	C-CAP 10pf 10% 50V SL	232100K
	C415,416	2 2 2 2	E-CAP 220uf 6.3V	211032Q
	C417,418	2 2 2 2	LC-CAP 0.47uf 50V	211505L
	C419	1 1 1 1	E-CAP 47uf 25V	211325Q
	C420	1 1 1 1	C-CAP 0.01uf +80, –20% 50V YG	231103Z
	R401,402	2 2 2 2	RES 100kohm 5% ¼W	328104J
	R403 404	2 2 2 2	RES 150ohm 5% ¼W	328150J
	R405,406	2 2 2 2	RES 10kohm 5% ¼W	328104J
	R407,408	2 2 2 2	RES 10kohm 5% ¼W	328103J
	R409,410	2 2 2 2	RES 15kohm 5% ¼W	328153J
	R411,412	2 2 2 2	RES 100kohm 5% ¼W	328104J
	R413,414	2 2 2 2	RES 220ohm 5% ¼W	328221J
	R415,416	2 2 2 2	RES 12kohm 5% ¼W	328123J
	R417,418	2 2 2 2	RES 220kohm 5% ¼W	328224J
	R419,420	2 2 2 2	FP-MO-RES 3.3kohm 5% ½W	360332L
	R421,422	2 2 2 2	RES 330ohm 5% ¼W	328331J
	R423,424	2 2 2 2	RES 470ohm 5% ¼W	328471J
	R425,426	2 2 2 2	RES 100kohm 5% ¼W	328104J

KEY NO.	SYMBOL NO.	TYPE+ WEND	DESCRIPTION++	PART NO.
			(PUSH SWITCH SECTION)	
	C501,502	2 2 2 2	C-CAP 470pf 10% 50V SL	232471K
	C503,504		– DELETED –	
	C505,506	2 2 2 2	C-CAP 150pf 10% 50V SL	232151K
	C507,508	2 2 2 2	M-CAP 0.047uf 10% 50V	222473K
	C509,510	2 2 2 2	M-CAP 0.056uf 10% 50V	222563K
	R501,502	2 2 2 2	RES 3.3kohm 5% ¼W	328332J
	R503,504	2 2 2 2	RES 2.2kohm 5% ¼W	328222J
	R505,506		– DELETED –	
	R507,508	2 2 2 2	RES 15kohm 5% ¼W	328153J
	R509,510	2 2 2 2	RES 12kohm 5% ¼W	328123J
	R511,512	2 2 2 2	RES 2.2kohm 5% ¼W	328222J
	R513,514	–2 2 2	RES 330kohm 5% ¼W	328334J
	R515,516	–2 2 2	RES 100kohm 5% ¼W	328104J
			MAIN AMP PC BOARD ASSEMBLY	
★601a		1 – – –	MAIN AMP PCB ASSEMBLY	**9430760**
★601b		–1 1 1	MAIN AMP PCB ASSEMBLY	**9430770**
★602		1 1 1 1	Heat sink	**7280350**
603		1 1 1 1	Washer – TW(I) 3φ	**893403U**
604		1 1 1 1	Screw – PTS 3φx6	810306S
605		3 3 3 3	Screw – PTS 3φx8	814308S
606		1 1 1 1	Lug, ground	4400000
★607		1 1 1 1	Jack, head phones	4550260
608	R521,522	2 2 2 2	VR GM80E722A – 250kohm Bx2 – volume	4320960
609	R531,532	1 1 1 1	VR GM70E533C – 100kohm x2 – bass	4320900
610	R537,538	1 1 1 1	VR GM70E533C – 100kohm x2 – treble	4320900
611	F701,702	–2 2 2	Midget fuse – **(S) 3.15AT 250V**	**4720390**
		–4 4 4	Holder, midget fuse	**7050430**
			(MAIN AMP SECTION)	
	Q701,702	2 2 2 2	TR 2SA798 (F or G)	514086S
	Q703 ~ Q706	4 4 4 4	TR 2SC945L (P or Q)	515077S
	Q707,708	2 2 2 2	TR 2SD666A (C or D)	511020S
	Q709,710	2 2 2 2	TR 2SD667A (B or C)	511022S
	Q711,712	2 2 2 2	TR 2SB647A (B or C)	510046S
	Q713,714	2 2 2 2	**TR 2SD586** (Q or R)	**513108S**
	Q715,716	2 2 2 2	**TR 2SB616** (Q or R)	**511108S**
	Q717	1 1 1 1	TR 2SC1627 (Q or Y)	511017S
	ZD 701	1 1 1 1	Zener diode RD13EB3	502063S
	L701,702	2 2 2 2	Coil, choke	1210830
	C701,702	2 2 2 2	LC-CAP 0.47uf 50V	211505L
	C703,704	2 2 2 2	C-CAP 68pf 10% 50V SL	232680K
	C705,706	2 2 2 2	C-CAP 15pf 10% 50V SL	232150K
	C707,708	2 2 2 2	E-CAP 100uf 6.3V	211030Q
	C709,710	2 2 2 2	E-CAP 47uf 50V	211525Q
	C711,712	2 2 2 2	C-CAP 22pf 10% 50V SL	232220K
	C713,714	2 2 2 2	C-CAP 0.022uf +80, –20% 50V YG	231223Z
	C715,716	2 2 2 2	C-CAP 220pf 10% 50V SL	232221K
	C717,718	2 2 2 2	M-CAP 0.1uf 10% 50V	222104K
	C719,720	2 2 2 2	E-CAP 47uf 50V	211525Q
	C721,722	2 2 2 2	E-CAP 47uf 50V	211525Q
	C723,724	2 2 2 2	C-CAP 220pf 10% 50V SL	232221K
	C725,726	2 2 2 2	M-CAP 0.01uf 10% 50V	222103K
	R727,728	2 2 2 2	Potentiometer – SR19R B470ohm	4300640
	R701,702	2 2 2 2	RES 1kohm 5% ¼W	328102J
	R703,704	2 2 2 2	RES 150kohm 5% ¼W	328154J
	R705,706	2 2 2 2	RES 22kohm 5% ¼W	328223J
	R707,708	2 2 2 2	RES 2.2kohm 5% ¼W	328222J
	R709,710	2 2 2 2	RES 1kohm 5% ¼W	328102J
	R711,712	2 2 2 2	RES **1kohm** 5% ¼W	**328102J**
	R713,714	2 2 2 2	RES **150kohm** 5% ¼W	**328154J**

www.hifiengine.com

PART ORDERING PROCEDURE ----- Do NOT USE THE "KEY" NUMBER AND "SYMBOL" NUMBER. (these are control # for the factory only.) Include in any order: a. Part number, b. Part description, c. Model number. (any of the above lacking from an order may delay shipment of that order.)

KEY NO.	SYMBOL NO.	TYPE+ WEND	DESCRIPTION ++	PART NO.
	R715,716	2 2 2 2	FP-MO-RES 3.9kohm 5% ½W	360392L
	R717,718	2 2 2 2	RES 680ohm 5% ¼W	328681J
	R719	1 1 1 1	FP-MO-RES 3.3kohm 5% ½W	360332L
	R720	1 1 1 1	RES 33kohm 5% ¼W	328333J
	R721,722	2 2 2 2	FP-MO-RES 2.2kohm 5% ½W	360222L
	R723,724	2 2 2 2	FP-MO-RES 3.3kohm 5% ½W	360332L
	R725,726	2 2 2 2	RES 2.7kohm 5% ¼W	328272J
	R727,728		(Potentiometer)	
	R729,730	2 2 2 2	RES 1kohm 5% ¼W	328102J
	R731,732	2 2 2 2	FP-MO-RES 220ohm 5% ½W	360221L
	R733,734	2 2 2 2	FP-MO-RES 220ohm 5% ½W	360221L
	R735,736	2 2 2 2	CEM-RES 0.47ohm 5% 5W	384479W
	R737,738	2 2 2 2	CEM-RES 0.47ohm 5% 5W	384479W
	R739,740	2 2 2 2	FP-MO-RES 10ohm 5% 2W	362100L
	R741,742	2 2 2 2	FP-MO-RES 10ohm 5% 2W	362100L
	R743,744	2 2 2 2	FP-MO-RES 330ohm 5% 2W	362331L
	R745	1 1 1 1	FP-MO-RES 47ohm 5% ½W	360470L
	R746		– DELETED –	
	R747,748	2 2 2 2	RES 1kohm 5% ¼W	328102J
			(TONE SECTION)	
	C521,522	2 2 2 2	E-CAP 10uf 16V	211220Q
	C523,524	2 2 2 2	E-CAP 10uf 16V	211220Q
	C525,526	2 2 2 2	M-CAP 0.027uf 10% 50V	222273K
	C527,528	2 2 2 2	M-CAP 0.22uf 10% 50V	222224K
	C529,530	2 2 2 2	M-CAP 0.0027uf 10% 50V	222273K
	C530,532	2 2 2 2	M-CAP 0.033uf 10% 50V	222333K
	R523,524	2 2 2 2	RES 6.8kohm 5% ¼W	328682J
	R525,526	2 2 2 2	RES 6.8kohm 5% ¼W	328682J
	R527,528	2 2 2 2	RES 12kohm 5% ¼W	328123J
	R529,530	2 2 2 2	RES 120kohm 5% ¼W	328124J
	R531,532		(TONE VR – bass)	
	R533,534	2 2 2 2	RES 1.8kohm 5% ¼W	328182J
	R535,536	2 2 2 2	RES 2.2kohm 5% ¼W	328222J
	R537,538		(TONE VR – treble)	
	R539,540	2 2 2 2	RES 820ohm 5% ¼W	328821J
	R541,542	2 2 2 2	RES 1 meg.ohm 5% ¼W	328105J

KEY NO.	SYMBOL NO.	TYPE+ WEND	DESCRIPTION ++	PART NO.
			REGULATOR PC BOARD ASSEMBLY	
★701a		1 – – –	REGULATOR PCB ASSEMBLY	9450890
★701b		– 1 1 1	REGULATOR PCB ASSEMBLY	9450900
★701c		– – – 1	REGULATOR PCB ASSEMBLY	9450910
702		1 1 1 1	Heat sink – S10, for Q803	7081820
703		1 1 1 1	Screw – PMS 3ϕx6	810306S
704a	F801	1 – – –	Fuse – 2A 250V MGC	4700620
705		2 – – –	Holder, fuse	7050420
704b	F801	– 1 1 1	Midget fuse – (S) 2AT 250V	4720370
706		– 2 2 2	Holder, midget fuse	7050430
	Q801	1 1 1 1	TR 2SC2002 (L or M)	512113S
	Q802	1 1 1 1	TR 2SA953 (L or M)	510109S
	Q803	1 1 1 1	TR 2SD288 (L or M)	513036S
	D801 ~ D804	4 4 4 4	Diode GP25D	560060S
	ZD801, ZD802	2 2 2 2	Zener diode RD13EB3	502063S
	ZD803	1 1 1 1	Zener diode RD22EB4	502059S
	C801,802	2 2 2 2	E-CAP 6800uf 42V	217947Q
	C803	1 1 1 1	E-CAP 470uf 25V	211335S
	C804	1 1 1 1	E-CAP 47uf 25V	211325Q
	C805,806	2 2 2 2	E-CAP 47uf 25V	211325Q
	C807,808	2 2 2 2	E-CAP 100uf 16V	211230Q
	C809	1 1 1 1	E-CAP 220uf 16V	211232Q
	C810	1 1 1 1	C-CAP 0.01uf +80, –20% 500V YG	238103P
	R801	1 1 1 1	FP-MO-RES 3.3kohm 5% ½W	360332L
	R802	1 1 1 –	RES 12kohm 5% ¼W	328123J
	R802	– – – 1	RES 18kohm 5% ¼W	328183J
	R803		– DELETED –	
	R804	1 1 1 1	RES 22kohm 5% ¼W	328223J
	R805	1 1 1 1	FP-MO-RES 120ohm 5% 3W	363121L
	R806	1 1 1 1	RES 6.8kohm 5% ¼W	328682J
	R807	1 1 1 1	FP-MO-RES 1.5kohm 5% 1W	361152L
	R808	1 1 1 1	FP-MO-RES 4.7kohm 5% 1W	361472L

www.hifiengine.com

SEMICONDUCTOR DATA

TRANSISTORS

† NOTES

Ge : Germanium
Si : Sillicon

A : Alloy
B : Base
D : Diffused
Dd : Double-diffused

Df : Drift-field
E : Epitaxial
G : Grown
J : Junction

M : Mesa
P : Planer
Pc : Point-contact
Td : Triple-diffused

DEVICE TYPE	APPLICATIONS	STRUCTURE†	MAXIMUM RATINGS Absolute-Maximum Values: (T_A = 25°C unless otherwise specified)					ELECTRICAL CHARACTERISTICS Typical Values: (T_A = 25°C unless otherwise specified)															MANUFACTURER
			Collector-to-Base Voltage V_{CBO} (V)	Emitter-to-Base Voltage V_{EBO} (V)	Collector Current I_C (mA)	Collector Dissipation P_C (mW)	Junction Temperature T_J (°C)	Collector Cutoff Current I_{CBO} (uA)	V_{CB} (V)	Static Forward-Current Transfer Ratio h_{FE}	V_{CE} (V)	I_C (mA)	Collector-Emitter Saturation Voltage $V_{CE(sat)}$ (V)	I_C (mA)	I_B (mA)	Gain-Bandwidth Product f_T $f_{\alpha b}$* (MHz)	V_{CE} V_{CB}* (V)	I_E I_C* (mA)	Output Capacitance C_{ob} (pF)	Base Spreading Resistance $\gamma_{bb'}$ hie* (real) (Ω)	V_{CE} V_{CB}* (V)	I_E (mA)	
2SA733A (P, Q)	AF	PNP Si–E	–60	–5	–100	250	125	–0.1	–60	135 ~ 400	–6	–1	–0.3	–100	–10	180	–6	–10	6				NEC
2SA798 (F, G)	AF: Low noise differential amp.	PNP.Dual Si–EP	–70	–5	–100	200	125	–0.1	–50	250 ~ 800	–6	–1	–0.6 max.	–10	–1	100	–6	–1	3				MITSUBISHI
2SA953 (L, M)	AF, Driver	PNP Si–E	–60	–5	–300	600	150	–0.18	–60	90 ~ 270	–1	–50	–0.6 max.	–300	–30	100	–6	–10	25 max.				NEC
25A991 (E, F)	AF: Low noise	PNP Si–E	–60	–5	–100	500	125	–0.05	–60	300 ~ 800	–6	–1	–0.5	–100	–10	90	–6	–1	10 max.				NEC
2SB616 (Q, R)	AF: Power amp.	PNP Si–E	–100	–5	–5A	60W (Tc=25°C)	150	–10	–80	60 ~ 200	–5	–1A	–2 max.	–3A	–0.3A	10	–5	–0.1A*	140	Complementary to 2SD586			NEC
2SB647A (B, C)	AF	PNP Si–E	–120	–5	–1A	0.9W	150	–10	–100	60 ~ 200	–5	–150	–1	–500	–50	140	–5	–150*	20	Complementary to 2SD667A			HITACHI
2SC945L (P, Q)	AF	NPN Si–E	60	5	100	250	125	0.1	120	135 ~ 400	6	1	0.15	100	10	250	6	–10	3.5				NEC
2SC1627 (O, Y)	AF, Driver	NPN Si–E	80	5	300	600	150	0.1	50	70 ~ 240	2	50	0.5	200	10	100	10	10	2				TOSHIBA
2SC1675 (L, M)	RF, Mixer, Osc. (in FM/AM radio)	NPN Si–E	50	5	30	250	125	0.1	50	40 ~ 180	6	1	0.08	10	1	250	6	1	2	$C_c \cdot \gamma_{bb'}$ = 10 pS	6*	–10	NEC
2SC2002 (L, M)	AF, Driver	NPN Si–E	60	5	300	600	150	0.1	60	90 ~ 270	1	50	0.6 max.	300	30	140	6	10	15 max.				NEC
2SD288 (L, M)	AF, Power amp.	NPN Si–Td	80	5	2A	20W (Tc=25°C)	150	10	50	40 ~ 120	5	0.5A	1	1A	0.1A								NEC
2SD586 (Q, R)	AF, Power amp.	NPN Si–E	100	5	5A	60W (Tc=25°C)	150	10	80	60 ~ 200	5	1A	2 max.	3A	0.3A	15	5	0.1A*	90	Complementary to 2SB616			NEC
2SD666A (B, C)	AF	NPN Si–E	120	5	50	0.9W	150	10	100	60 ~ 200	5	10	2	30	3	140	10	10*	3				HITACHI
2SD667A (B, C)	AF	NPN Si–E	120	5	1A	0.9W	150	10	100	60 ~ 200	5	150	1	500	50	140	5	150*	12	Complementary to 2SB647A			HITACHI

FIELD EFFECT TRANSISTORS

DEVICE TYPE	APPLICATIONS	STRUCTURE†	MAXIMUM RATINGS Absolute-Maximum Values: (T_A = 25° C unless otherwise specified)						ELECTRICAL CHARACTERISTICS Typical Values: (T_A = 25° C unless otherwise specified)																MANUFACTURER
			Gate-to-Drain Voltage V_{GDO} (V)	Gate-to-Source Voltage V_{GSO} (V)	Gate Current I_G (mA)	Drain Current I_D (mA)	Total Dissipation P_D (mW)	Channel Temperature T_{ch} (°C)	Gate Leak Current Test Conditions	I_{GSS} (nA)	Gate to Drain Breakdown Voltage Test Conditions	$V_{(BR)GDO}$ (V)	Drain Current Test Conditions	I_{DSS} (mA)	Gate to Source Cutoff Voltage Test Conditions	$V_{GS(off)}$ (V)	Forward Transfer Admittance Test Conditions	$\lvert Y_{fs}\rvert$ (m℧)	Feed Back Capacitance Test Conditions	C_{rss} (pF)	Power Gain (Common Source) Test Conditions	G_{PS} (dB)	Noise Figure Test Conditions	NF (dB)	
2SK104 (F)	AF, RF General	Si N-channel junction	–30	–30	10	20	250	125	V_{GS} = –30V	10			V_{DS} = 5V	1~3	V_{DS} = 5V I_D = 10mA	–1.1	V_{DS} = 5V V_{GS} = 0 f = 1KHz	4.1	V_{DS} = 10V V_{GS} = 0 f = 1KHz	0.9					NEC

DIODES, LED'S

DEVICE TYPE	APPLICATIONS	STRUCTURE†	MAXIMUM RATINGS Absolute - Maximum Values: (T_A = 25°C unless otherwise specified)									ELECTRICAL CHARACTERISTICS Typical Values: (T_A = 25°C unless otherwise specified)							MANUFACTURER
			Reverse Surge Voltage V_{Rsurge} (V)	Peak Reverse Voltage V_{RM} (V)	Reverse Voltage V_R (V)	Peak Forward Voltage V_{FM} (V)	Peak Forward Current I_{FM} (mA)	Average Rectified Current I_O (mA)	Forward Surge Current $I_{F\,surge}$ (A)	Junction Temperature T_J (°C)	Total Power Dissipation P_D (mW)	Forward Current I_{Fmin} (mA)	Test Condition V_F (V)	Forward Voltage V_{Fmax} (V)	Test Condition I_F (mA)	Reverse Current I_{Rmax} (uA)	Test Condition V_R (V)	Others	
1SS53	Detector, Medium Speed switching	Si–EP		35	30		300	100	2	200	500			0.8 1.0	1 30	0.1	30		NEC
GP25D	Rectifier	Si–DJ		200				2.5A	100	150				1.1	2.5A	5			GENERAL INSTRUMENT
GL–2PG1	Lamp (green)	GaP			5			I_F = 30mA		85	85			2.8	20	10	4	I_V = 0.3mcd (I_F = 20mA)	SHARP
GL–2AR1	Lamp (red)	GaAsP			4		200	I_F = 40mA		85	80			1.9	20	100	3	I_V = 0.6mcd (I_F = 20mA)	SHARP

ZENER DIODES

DEVICE TYPE	APPLICATIONS	STRUCTURE†	MAXIMUM RATINGS Absolute - Maximum Values: (T_A = 25°C unless otherwise specified)			ELECTRICAL CHARACTERISTICS Typical Values: (T_A = 25°C unless otherwise specified)														MANUFACTURER
			Total Power Dissipation P_D (mW)	Zener Current I_Z (A)	Junction Temperature T_J (°C)	Zener Voltage V_Z MIN (V)	TYP (V)	MAX (V)	Test Conditions I_Z (mA)	Differential Resistance r_Z TYP (Ω)	MAX (Ω)	Test Conditions I_Z (mA)	Temperature Coefficient γ_Z TYP (%/°C)	MAX (%/°C)	Test Conditions I_Z (mA)	Reverse Current I_Z MAX (μA)	Test Conditions V_R (V)	Others	
RD2.2 EC		Si junction	400		175	2.2		2.45	20		120	20				120	0.7		NEC
RD6.2 EB1		Si junction	400		175	5.96		6.27	20		20	20				5	1.5		NEC
RD 13 EB1		Si junction	400		175	12.99		13.66	10		25	10				2	10		NEC
RD 22 EB4		Si junction	400		175	21.52		22.63	5		60	5				2	17		NEC

www.hifiengine.com

INTEGRATED CIRCUITS HA11225

DEVICE TYPE	APPLICATION	ABSOLUTE MAXIMUM RATINGS (T_A = 25°C)				ELECTRICAL CHARACTERISTICS (T_A = 25°C) Typical Values							MANUFACTURER
		Supply Voltage Vcc (V)	Power Dissipation P_T (mW)	Operating Temperature Range Topr (°C)	Storage Temperature Range Tsig (°C)	Supply Current (mA)	Input Limiting Sensitivity Vin (lim) (μV)	AF Voltage (mVrms)	Total Harmonic Distortion (%)	Signal to Noise Ratio (dB)	AM Rejection (dB)	Muting Sensitivity (μV)	
HA11225	FM IF Amplifier, Quadrature Detector	14	590 (Ta=60°C)	−20 ~ +70	−55 ~ +125	33 max.	35 (−3dB point)	380	0.1 max.	84	54	158	HITACHI

TERMINAL GUIDE (TOP VIEW)

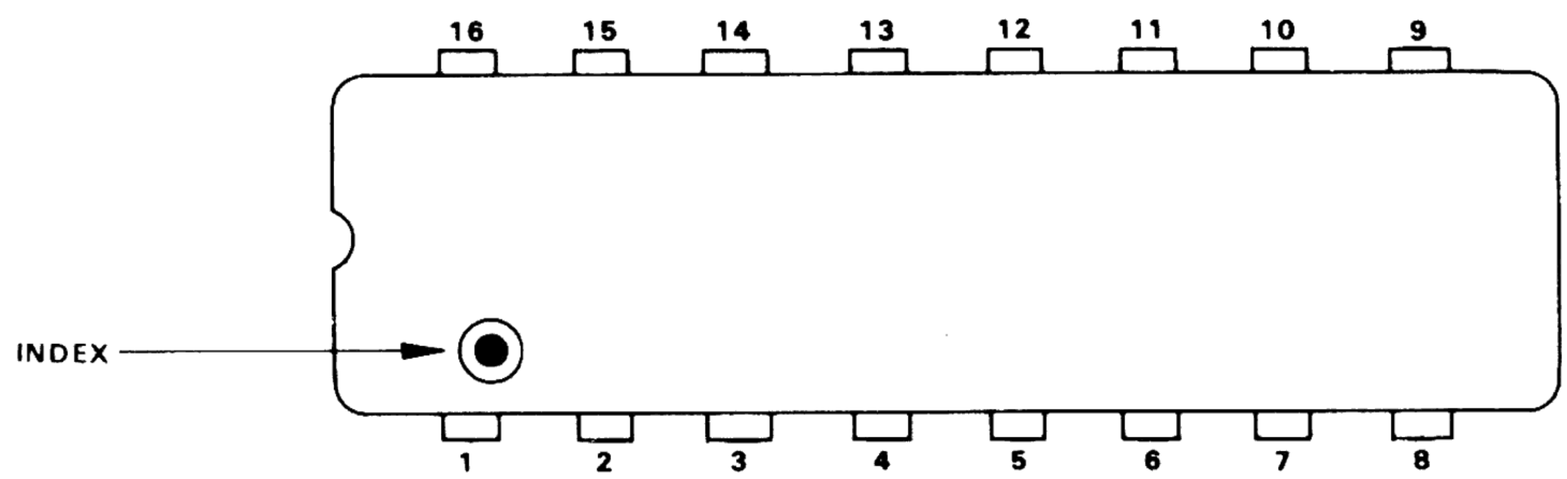

BLOCK DIAGRAM

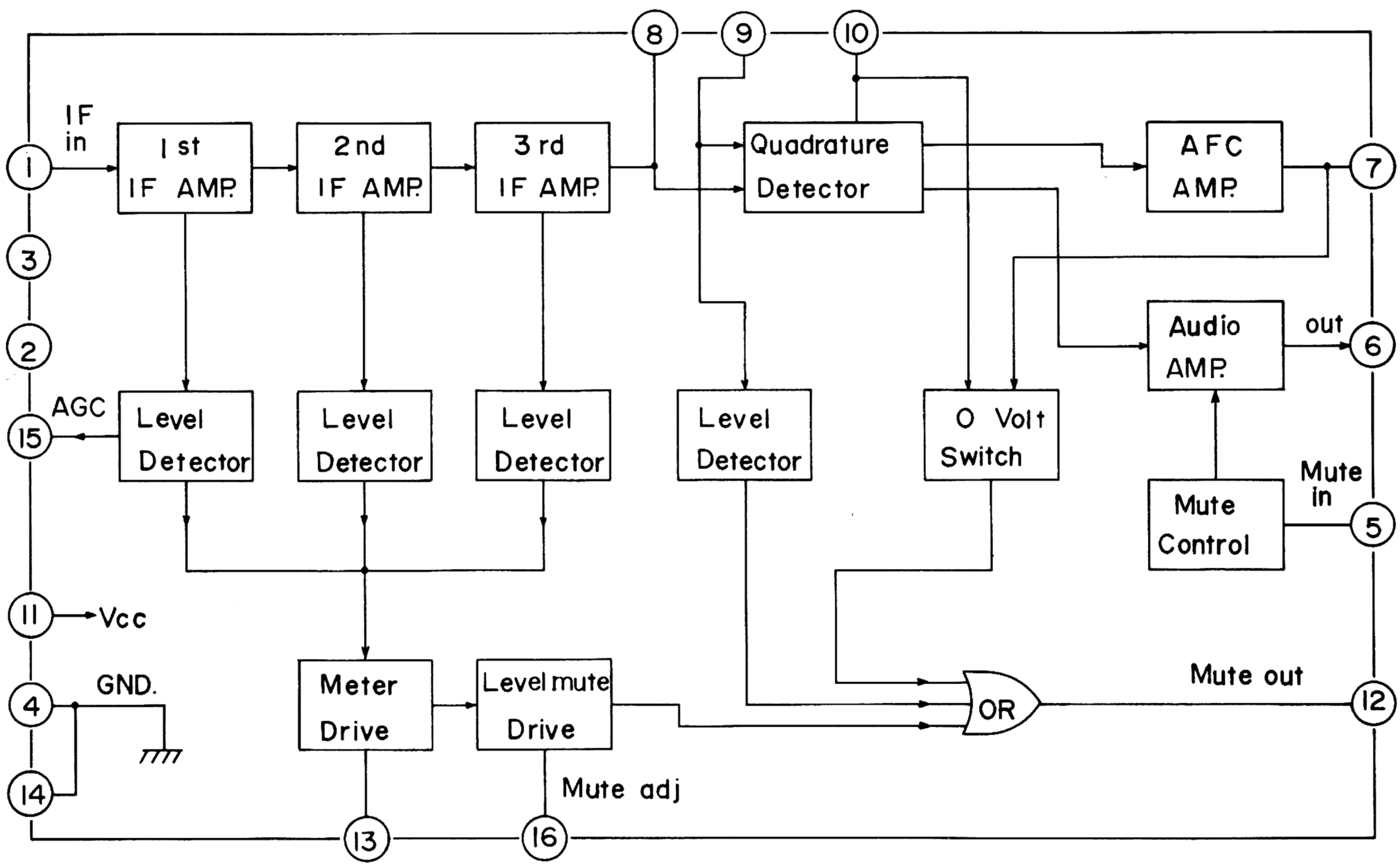

www.hifiengine.com

INTEGRATED CIRCUITS TA7624P

DEVICE TYPE	APPLICATION	MAXIMUM RATINGS Absolute – Maximum Values: (T_A = 25°C)				ELECTRICAL CHARACTERISTICS Typical Values: (T_A = 25°C)								MANUFACTURER
		Supply Voltage (V)	Power Dissipation (mW)	Operating Temperature Range (°C)	Lamp Current (mA)	Supply Current (mA)	Stereo Separation (dB)	Voltage Gain (dB)	Channel Balance dB)	T. H. D. (mono) (%)	T. H. D. (stereo) (%)	Signal to Noise Ratio (dB)	Lamp ON Sensitivity (mV)	
TA7624P	FM Stereo Demodulator	16	750	−30 ~ +75	45	21 max.	55 (f = 1 kHz)	11	1.5 max.	0.01	0.02	86	25 max. Pilot Input	TOSHIBA

TERMINAL GUIDE (TOP VIEW)

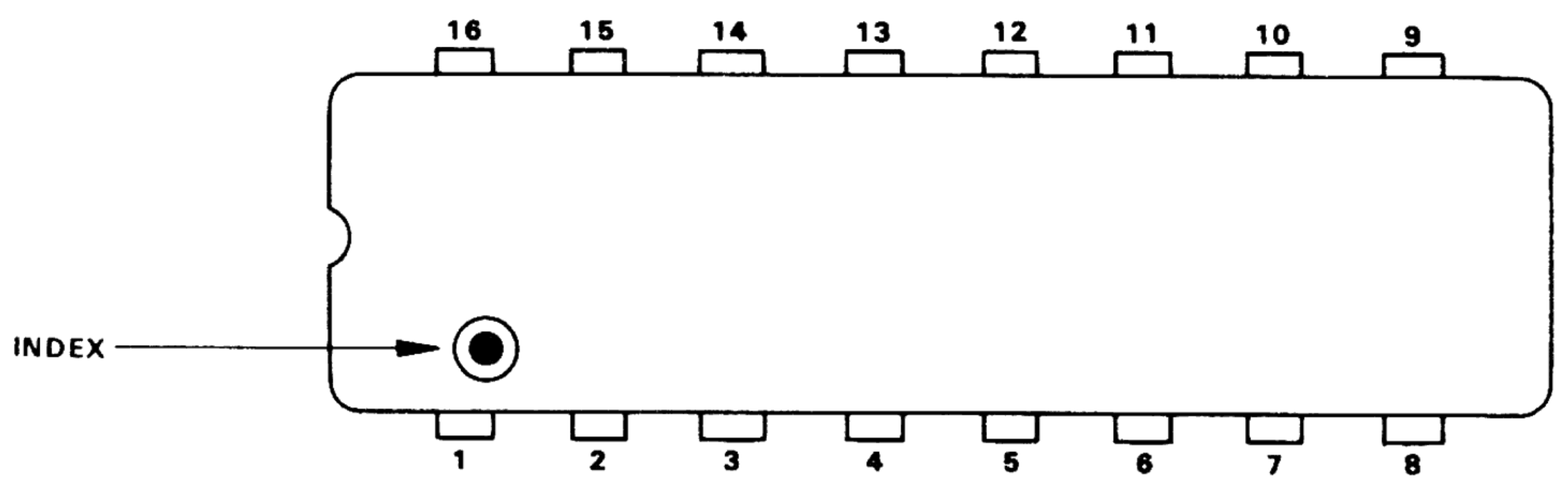

BLOCK DIAGRAM

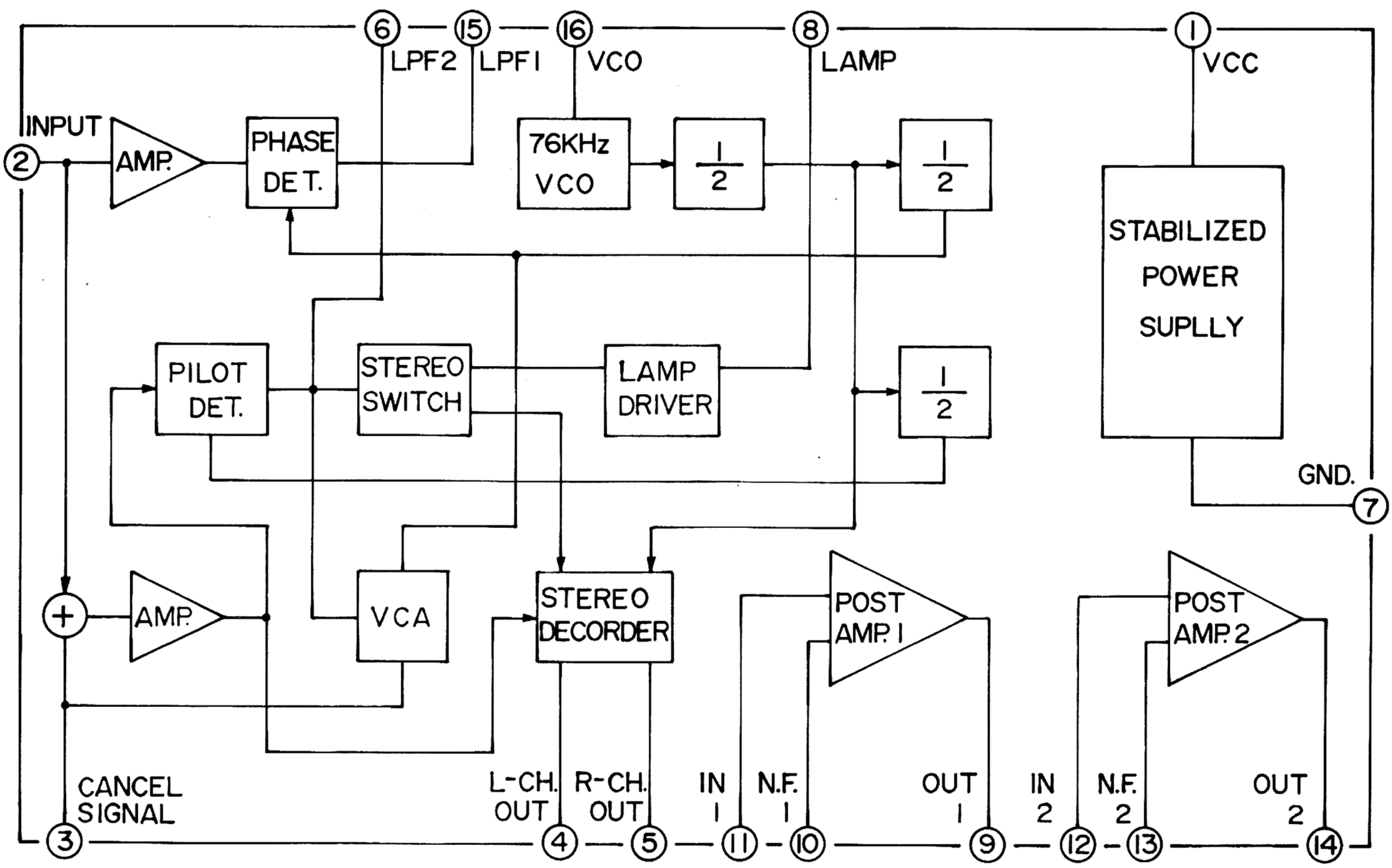

www.hifiengine.com

INTEGRATED CIRCUITS HA1197

DEVICE TYPE	APPLICATION	ABSOLUTE MAXIMUM RATING (T_A = 25°C)				ELECTRICAL CHARACTERISTICS (TYPICAL VALUES) T_A=25°C				MANUFACTURER
		Voltage Supply Vcc (V)	Power Dissipation Pd (mW)	Operating Temp Range Topt (°C)	Storage Temp Range Tstg (°C)	Signal to Noise Ratio Input=74dBμ Mod = 30% (dB)	Distortion Input=100dBμ Mod = 30% (%)	Output Voltage Input=74dBμ Mod = 30% (mV)	Quiescent Current (mA)	
HA1197	AM Radio	15	450 (Ta = 70°C)	−20 ~ +70	−55 ~ +125	53	0.4	212	14.5	HITACHI

TERMINAL GUIDE (TOP VIEW)

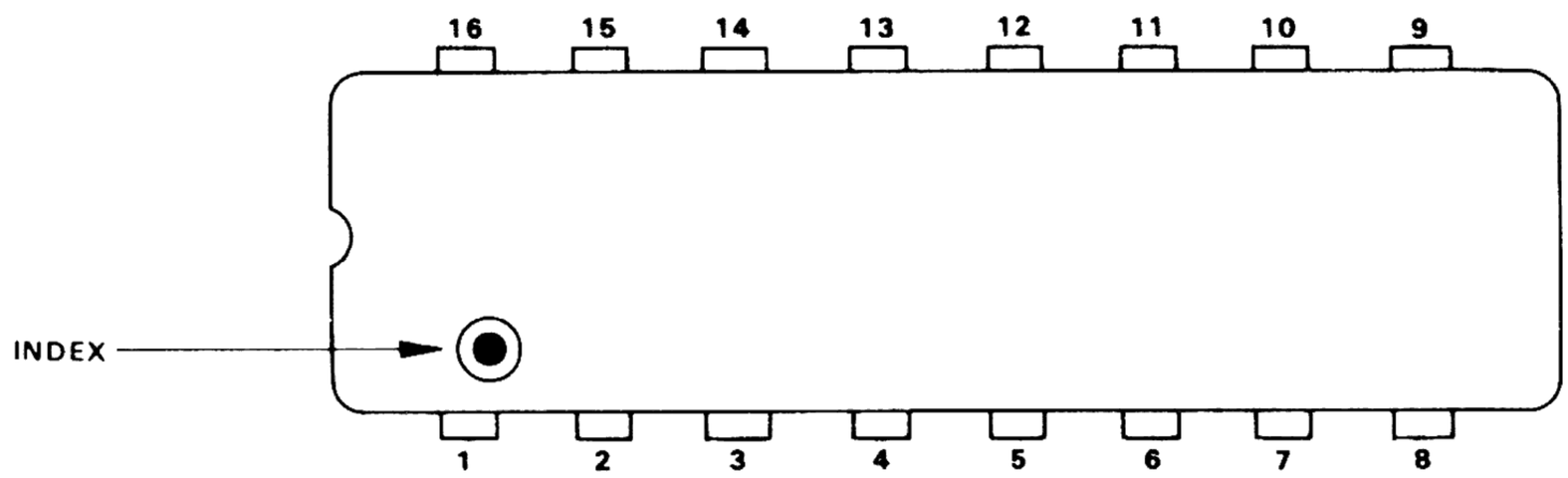

SCHEMATIC DIAGRAM

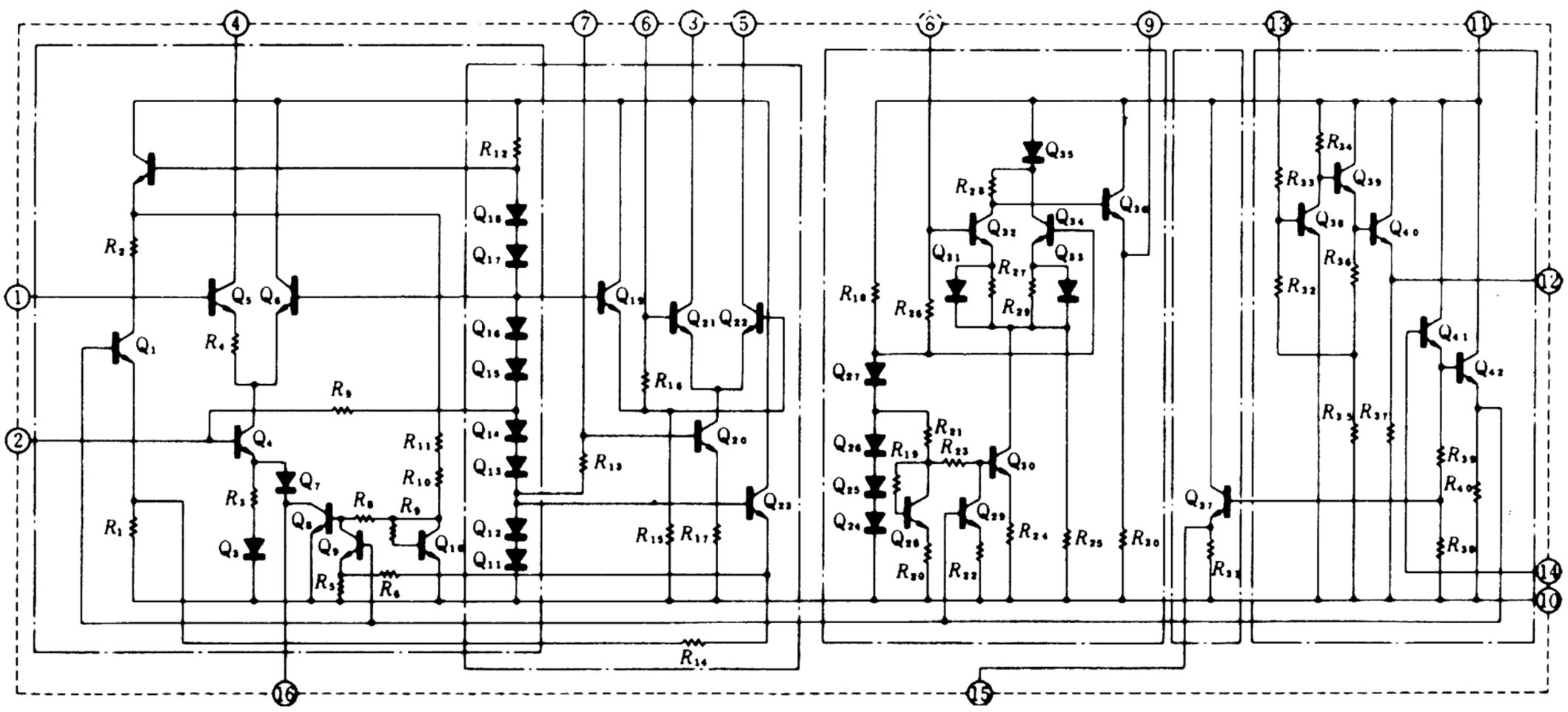

www.hifiengine.com

INTERGRATED CIRCUITS μPD4069C

FUNCTION/MANUFACTURER

- Hex Inverter/NEC

EQUIVALENT CIRCUIT AND CONNECTION INFORMATION

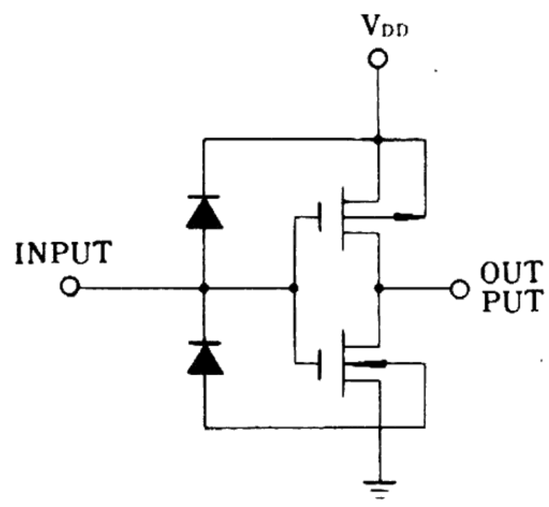

(1/6 CIRCUIT SHOWN)

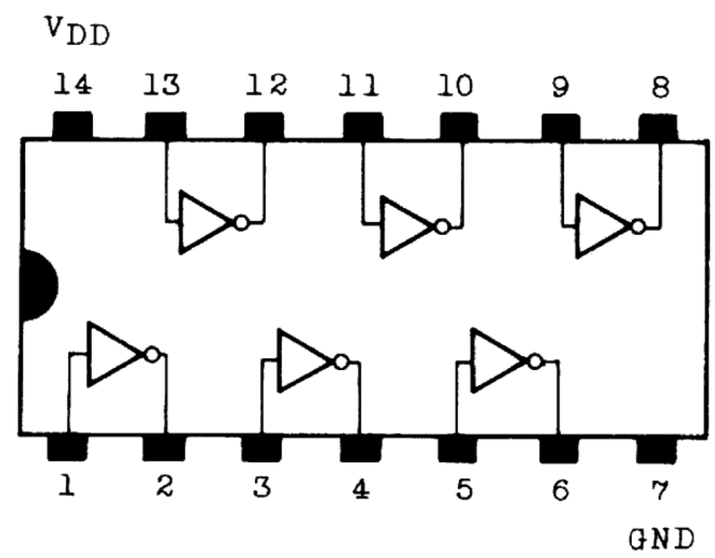

TOP VIEW

MEMO

www.hifiengine.com

NIKKO ELECTRIC MFG. CO., LTD.
HEAD OFFICE
4-1, Okusawa 3-chome, Setagaya-ku, Tokyo 158, Japan
SALES OFFICE
Mitsubishi Bank Bldg., 3-2, Dogenzaka 1-chome
Shibuya-ku, Tokyo 150, Japan

Nikko Audio OF AMERICA
HEAD OFFICE
16270 Raymer St., Van Nuys, Ca. 91406, U.S.A.
N.Y. OFFICE
320 Oser Ave., Hauppauge, N.Y. 11785, U.S.A.

965178E 79, May 1,200 Printed in Japan

www.hifiengine.com

SCHEMATIC DIAGRAM

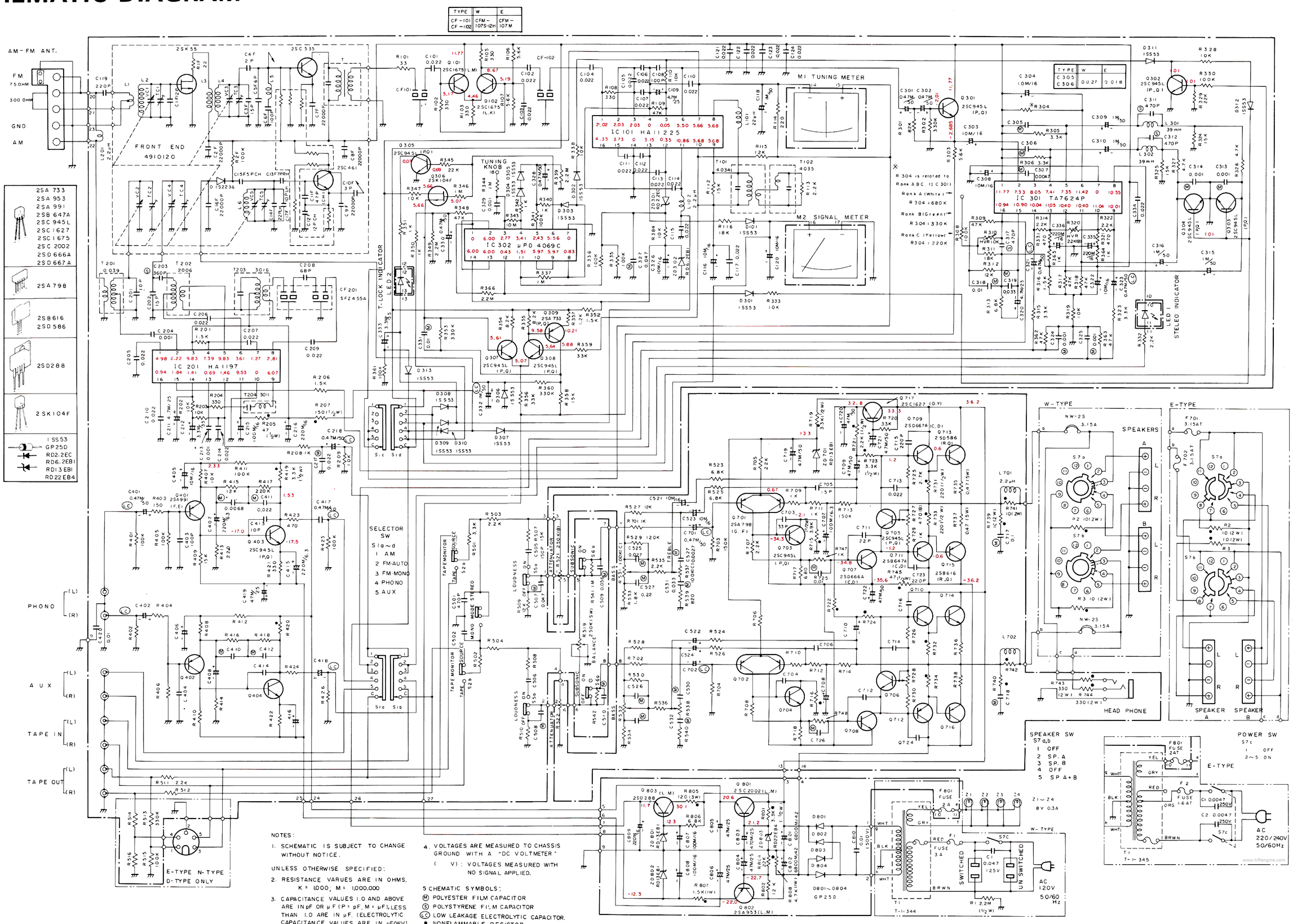

Figure 10