# KENWOOD

# AM-FM STEREO RECEIVER

# KR-5400

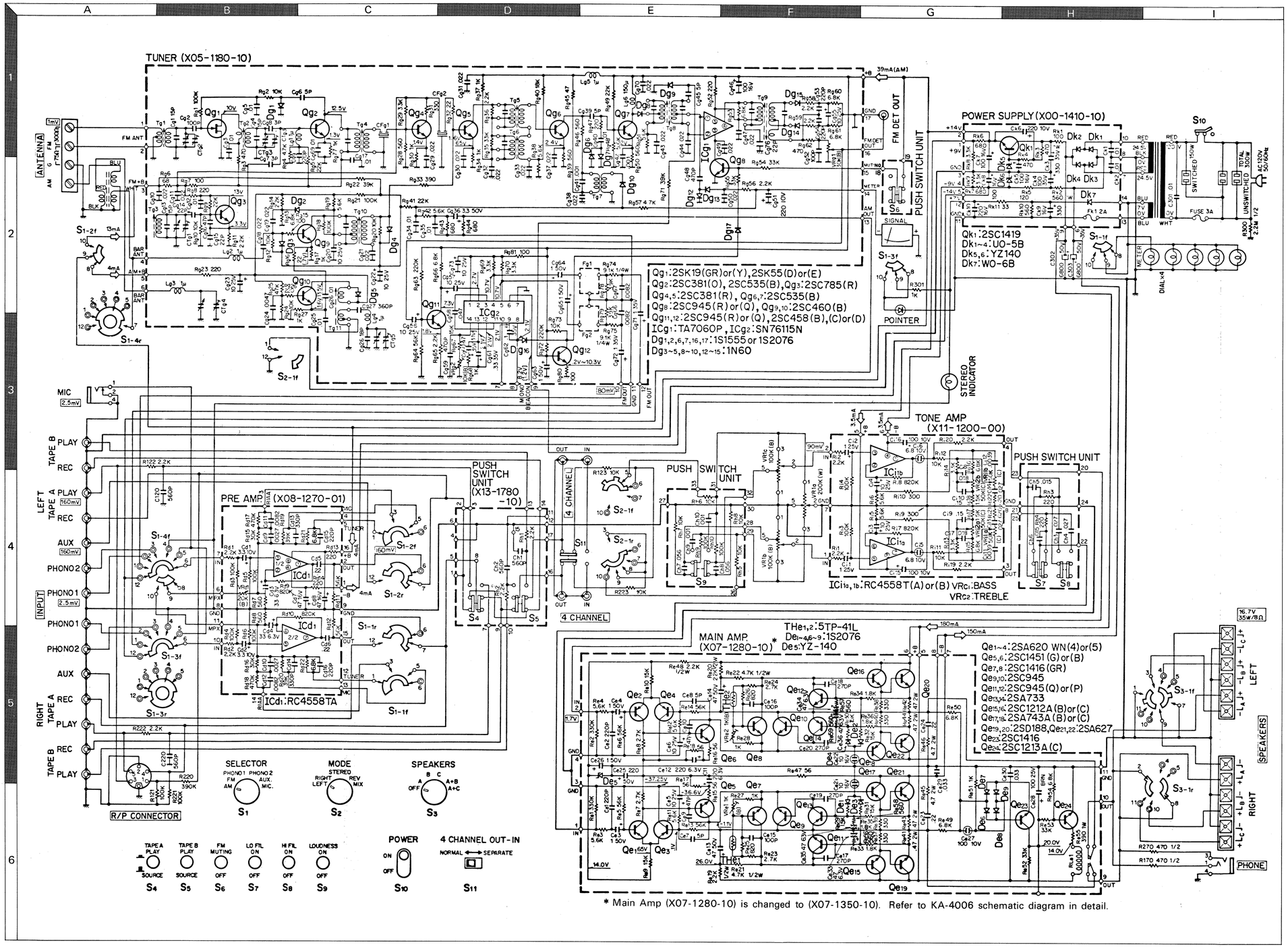


* Main Amp (X07-1280-10) is changed to (X07-1350-10). Refer to KA-4006 schematic diagram in detail.

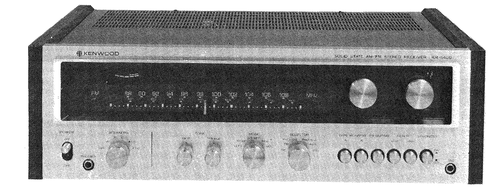

## SPECIFICATIONS

### FM TUNER SECTION

| | |
|---|---|
| Frequency Range | 88 MHz to 108 MHz<br>87.5 MHz to 108 MHz (FTZ Approved) |
| Usable Sensitivity (IHF) | 1.9 μV |
| Quieting Slope | 5 μV 48 dB, 10 μV 60 dB, 50 μV 68 dB |
| Frequency Response | 20 Hz ~ 15,000 Hz $^{+0.5}_{-1.5}$ dB |
| Harmonic Distortion | 0.3% Mono (at 400 Hz 100% modulation)<br>0.5% Stereo (at 400 Hz 100% modulation) |
| Signal to Noise Ratio | 68 dB at 1 mV input |
| Image Rejection | 70 dB |
| Selectivity (IHF ALT channel) | 65 dB |
| IF Rejection | 90 dB |
| Spurious Signal Rejection | 90 dB |
| AM Suppression | 70 dB |
| Capture Ratio | 1.5 dB |
| Stereo Separation | 35 dB at 1,000 Hz<br>27 dB at 10,000 Hz |
| Sub Carrier Suppression | 60 dB |
| Antenna Impedance | 300 ohms balanced & 75 ohms unbalanced |

### AM TUNER SECTION

| | |
|---|---|
| Usable Sensitivity (IHF) | 18 μV |
| Signal to Noise Ratio | 45 dB at 1 mV input |
| Image Rejection | 60 dB |
| Selectivity (IHF) | 30 dB |
| IF Rejection | 40 dB |
| Antenna | Built-in ferrite bar antenna, External antenna terminals |

### MAIN-AMPLIFIER SECTION

| | |
|---|---|
| RMS Power Output | |
| Both channels driven | 35 Watts x 2 into 8 ohms at 20 Hz ~ 20,000 Hz<br>37 Watts x 2 into 8 ohms at 1,000 Hz<br>47 Watts x 2 into 4 ohms at 1,000 Hz |
| Dynamic Power Output | 115 Watts into 8 ohms<br>150 Watts into 4 ohms |
| Total Harmonic Distortion | 0.5% at rated power into 8 ohms<br>0.07% at 1/2 rated power into 8 ohms<br>at 1000 Hz |
| Intermodulation Distortion (60 Hz: 7KHz = 4 : 1) | 0.5% at rated power into 8 ohms<br>0.05% at 1/2 rated power into 8 ohms |
| Power Bandwidth | 10 Hz ~ 30,000 Hz |
| Signal to Noise Ratio at 50 mW | 55 dB |
| Damping Factor | 50 at 8 ohms |
| Speaker Impedance | Accept 4 ohms to 16 ohms |

### PRE-AMPLIFIER SECTION

| | |
|---|---|
| Input Sensitivity and Impedance | |
| Phono 1 | 2.5 mV. 50 Kohms |
| Phono 2 | 2.5 mV. 50 Kohms |
| Aux | 150 mV. 80 Kohms |
| Tape Play A, B | 150 mV. 80 Kohms |
| Mic | 2.5 mV. 50 Kohms |
| Maximum Input Voltage (rms) | |
| Phono 1, 2 | 120 mV. T.H.D. 0.5% at 1,000 Hz |
| Signal to Noise Ratio (IHF A curve) | |
| Phono 1, 2 | 70 dB |
| Aux | 90 dB |
| Tape Play A, B | 90 dB |
| Mic | 65 dB |
| Output Voltage and Impedance | |
| Tape Rec. A, B (pin) | 150 mV. 100 ohms |
| (Din connector) | 30 mV. 80 Kohms |
| 4ch. out | 150 mV. |
| Frequency Response | |
| Phono 1, 2 | RIAA Standard curve ±1 dB |
| Aux, Tape Play | 10 Hz ~ 40,000 Hz ±1 dB |
| Tone Controls | |
| Bass | ±10 dB at 100 Hz |
| Treble | ±10 dB at 10,000 Hz |
| Loudness Control (−30 dB) | +8 dB at 100 Hz<br>+5 dB at 10,000 Hz |
| Low Filter 100 Hz | −8 dB |
| High Filter 10,000 Hz | −10 dB |

### GENERAL

| | |
|---|---|
| Switches | |
| Speaker Selector | OFF, A, B, C, A + B, A + C |
| Input Selector | AM–FM–PHONO 1–PHONO 2–AUX–MIC |
| Mode | LEFT–RIGHT–STEREO–REV–MIX |
| Tape Monitor | A (ON-SOURCE), B (ON-SOURCE) |
| Others | LOW FILTER, HIGH FILTER, FM MUTING, LOUDNESS, MIC jack, PHONES jack |
| AC Outlet | Switched 1, Unswitched 2 |
| Power Consumption | 240 Watts at full power<br>30 Watts at no signal |
| Dimension | W18-15/16"(480 mm), H5-15/16" (151 mm). D13-9/16" (344 mm) |
| Weight | 25.4 lbs. (11.5 Kg) |