The Harman-Kardon Model 330A

AM/FM Stereo FM Solid State Receiver

Technical Manual

harman/kardon

www.hifiengine.com

PREAMP BOARD

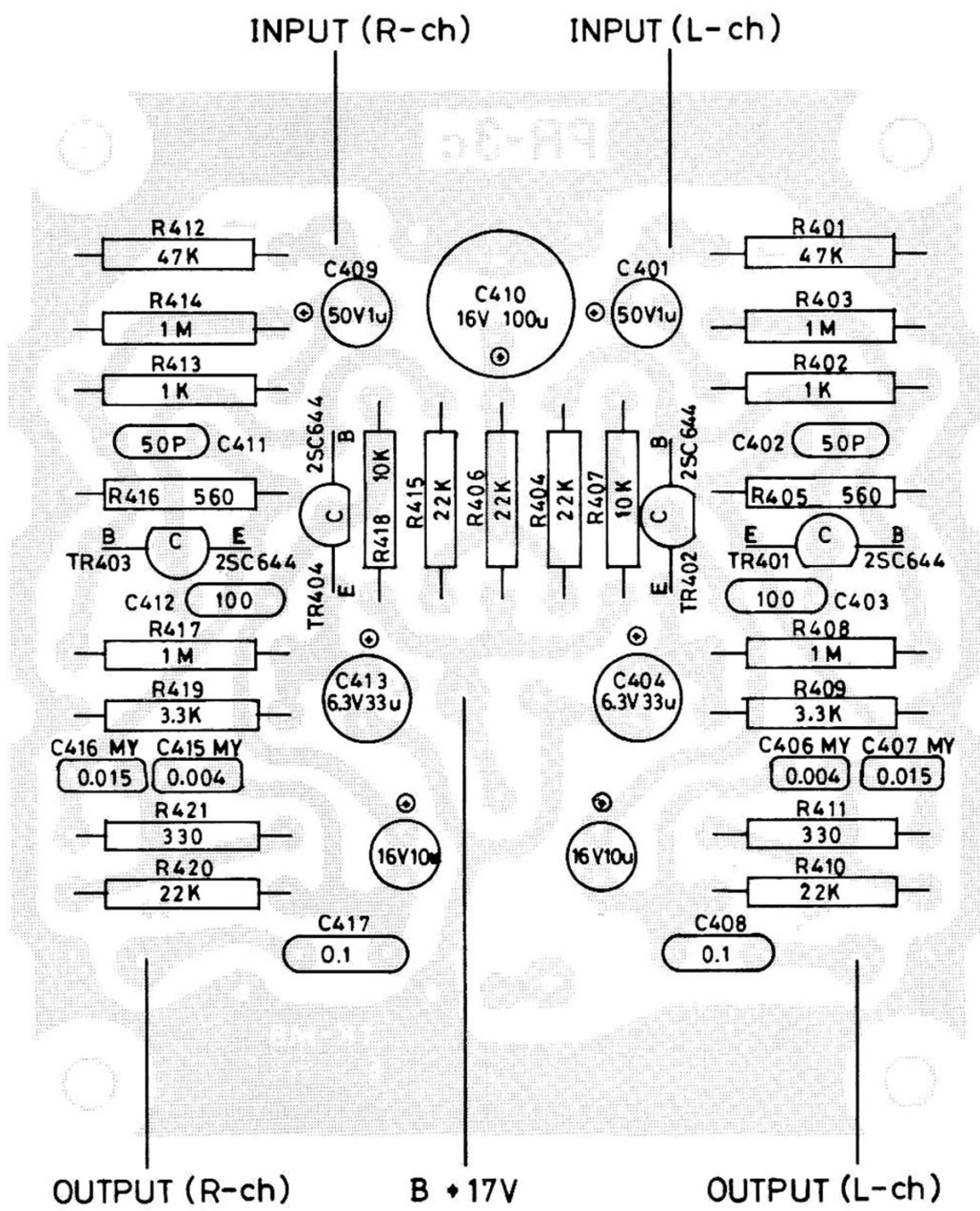

MULTIPLEX BOARD

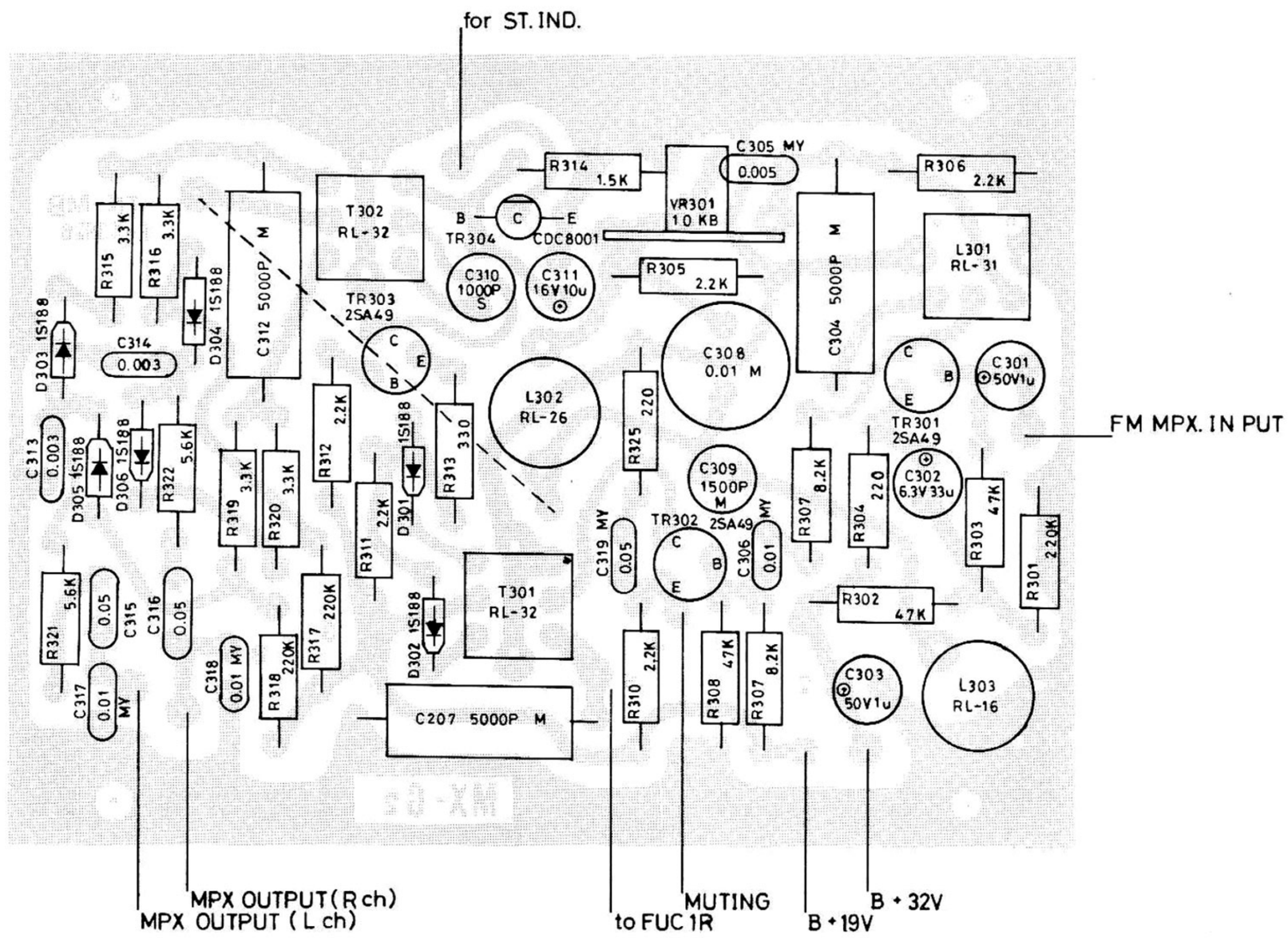

FM IF BOARD

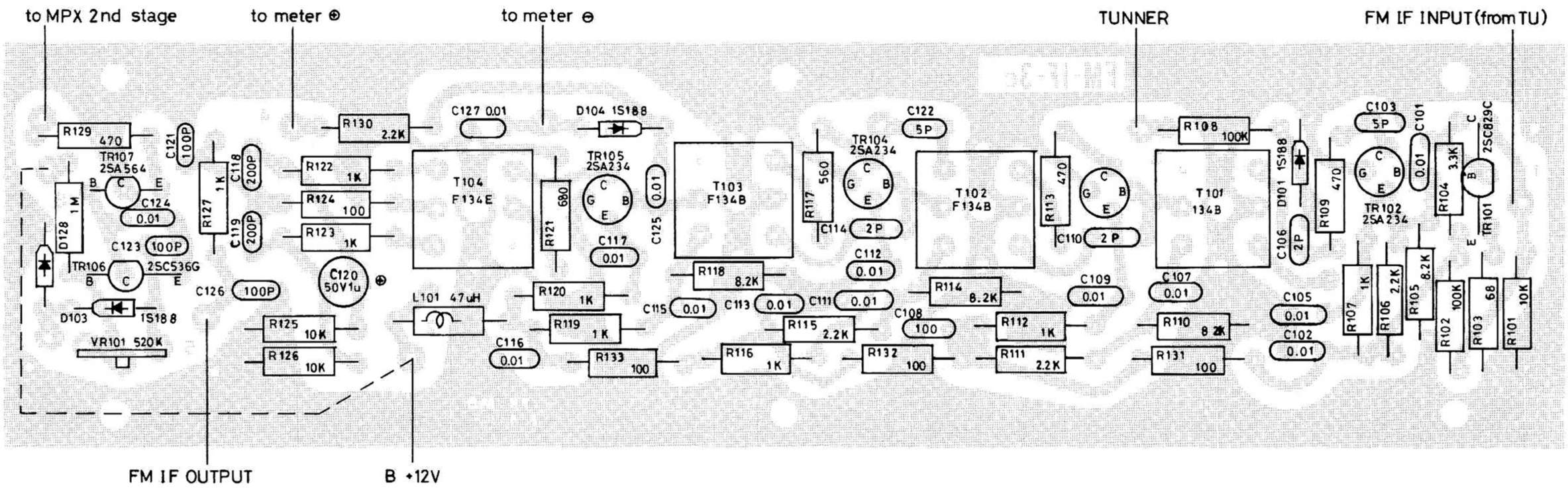

AM IF BOARD

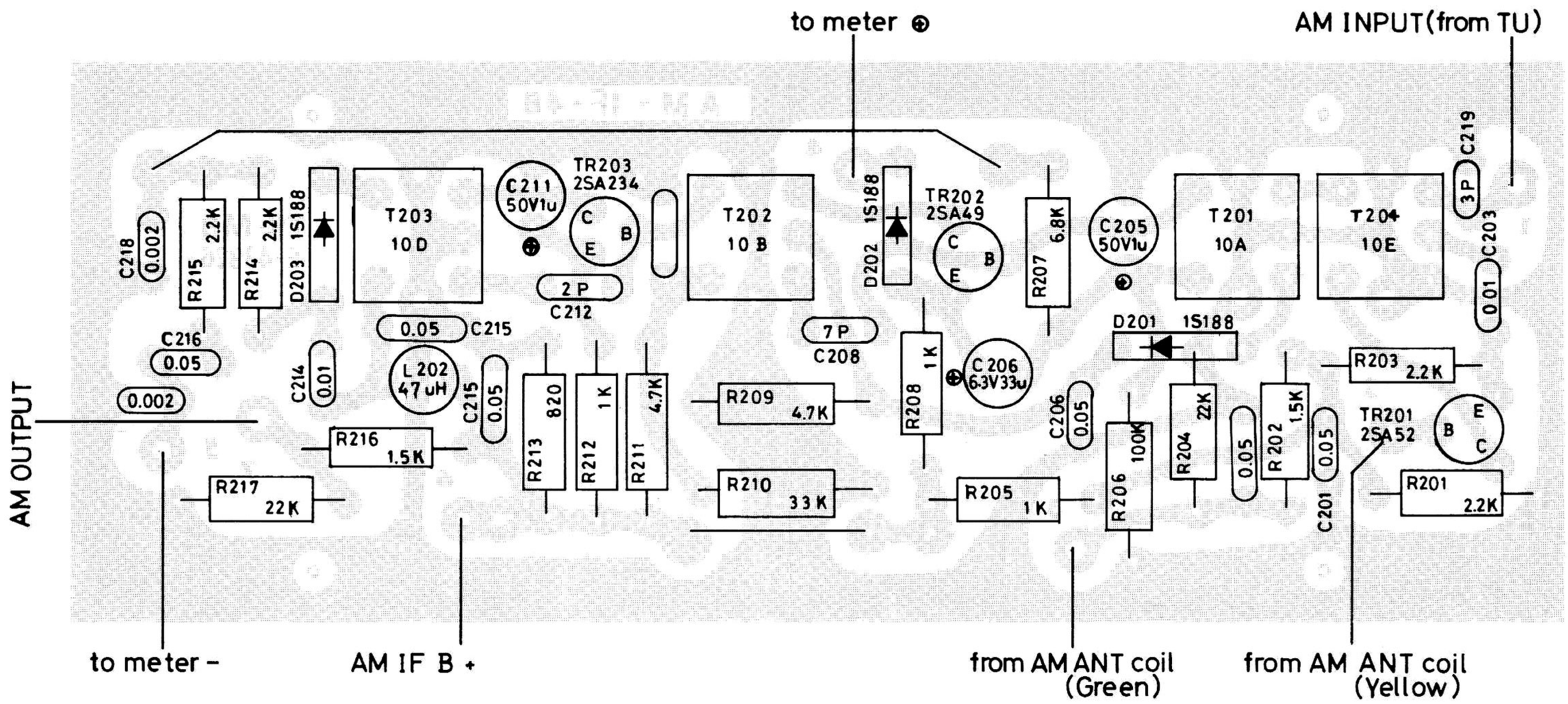

FM ALIGNMENT

FM ALIGNMENT
INSTRUMENTS: FM Signal Generator, V.T.V.M. Oscilloscope, & Distortion meter
Set Selector Switch to " FM "

STEP	Signal Generator		Tuning Dial Setting	OUTPUT INDICATOR	Adjust	Adjust for
	Connected to	Freq.		Connected to		
1	Junction of C919, C920 (IF Input)	10.7 MHz (unmodu-lated)	Quiet point on band	V.T.V.M. across R122	T104 Bottom (Pri)	Maximum
2				(Set to Center Zero) Junction of R127, C126 (IF OUT PUT)	T104 Top (Sec)	Zero Voltage
3	Repeat steps 1 and 2 as necessary to obtain a balanced " S " curve					
4	FM Antenna terminal (Signal strength must be kept -3db limitter satulation).	98 MHz (400Hz 100% MOD.)	Tune for maximum output	Oscilloscope / Tape out	T103, T102, T101 & T2 (FRONT END) Top & Bottom	Maximum
5				Tape out	T104 Top & Bottom fine adjust	Minimum Distortion
6		88 MHz	88 MHz	V.T.V.M. / Tape out	L2, L1, & T1 (FRONT END)	Maximum
7		106 MHz	106 MHz	V.T.V.M. / Tape out	TR3, TR2, & TR1 (FRONT END)	
8	Repeat steps 6 & 7 until no further improvement is possible.					

MPX ALIGNMENT

MPX ALIGNMENT
INSTRUMENTS: AUDIO GENERATOR, FM STEREO GENERATOR & OSCILLOSCOPE
SET SELECTOR SWITCH TO " FM STEREO " TUNING DIAL SETTING: STEREO SIGNAL GENERATOR FREQUENCY.

STEP	19 KHz PILOT LEVEL	Signal Generator Freq. Set to	Output Indicator Connected to	Adjust	Adjust for
1		Audio Generator 67 KHz	Oscilloscope TP-1	L 302	Minimum
2		72 KHz		L 303	
3	1 - 2%	Stereo Generator 19 KHz	TP-2	L 301 T 301, T 302	Maximum
4	10%	1,000 Hz Composite L chan	L chán T. OUT	L 301,	Maximum and cleanest sine wave on scope
5	10%	Composite 1,000 Hz, L chan	Tape Output R chan	VR 301	Minimum
6					
7		Composite 1,000 Hz R chan	Tape Output L chan		
8	4 - 6%	1,000 Hz Composite L or R chan	check the stereo beacon lamp just comes on		
9	Repeat steps 7 and 8 until no further improvement is possible.				

www.hifiengine.com

AM ALIGNMENT

AM ALIGNMENT
INSTRUMENTS: AM Signal Generator. VTVM
Set Selector Switch to " AM "

Input Signal must be kept as low as possible to avoid A.V.C. action

STEP	Signal Generator		Tuning Dial setting	OUTPUT INDICATOR	Adjust	Adjust for
	Connected to	Freq.		Connected to		
1	Tr201 Bass through a 0.01uF Capacitor	455 KHz (400Hz 30% MOD)	Quieting point on band	V.T.V.M. / Tape out	T203, T202 & T201	Maximum
2	Use loop antenna	600 KHz (400Hz 30% MOD)	600 KHz		L201 & Ring of loop stick ANT	
3		1,400 KHz (400Hz 30% MOD)	1,400 KHz		PC4, PC5 (FRONT END)	
4	Repeat steps 2 and 3 until no further improvement is possible					

PREDRIVER/DRIVER ADJUSTMENT

- Set Balance, Bass and Treble controls to their center position.
- Set Mode switch to "STEREO" Speaker switches to "ON" and Selector switch to "AUX".
- Connect 8 ohm (50W) resistor across L speaker terminals in parallel with the load resistor, connect the vertical input leads of the oscilloscope.
- Connect an audio generator, set for 1,000 Hz (sine wave) to the left channel "AUX" input.
- Rotate volume control to clockwise position full volume. Increase generator output until sine wave on scope just starts clipping. Adjust DC balance VR 501 fo requal clipping on the positive and negative half cycles on the signal.
- Adjust crossover potentiometer VR 502 until the crossover notch just disappears (rotate volume control to counter clockwise position to get 0.1 watt (0.9 V RMS) output), or adjust idling current, using a DC mV meter in parallel of R918 (0.5 ohm), rotate VR 502 to obtain a 10mV reading on DC mV meter. (no signal input).
- Repeat preceding steps for right channel.

www.hifiengine.com

TOP VIEW

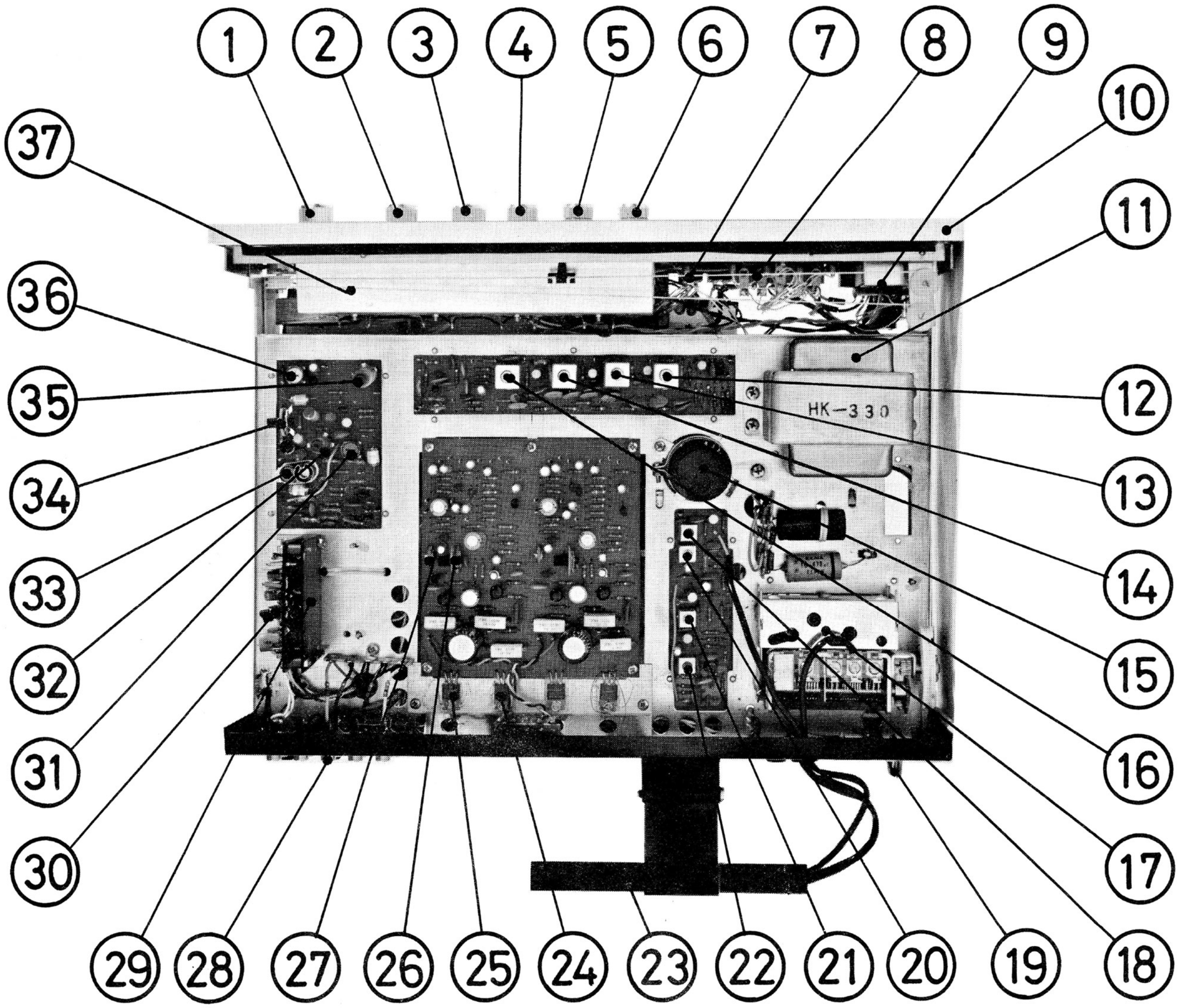

1. TUNING
2. FUNCTION SWITCH
3. VOLUME CONTROL
4. BALANCE CONTROL
5. TREBLE CONTROL
6. BASS CONTROL
7. STEREO INDICATOR LAMP
8. FUNCTION LAMP
9. METER LAMP
10. FRONT PANEL
11. POWER TRANSFORMER
12. FM I.F.T. (T101)
13. FM I.F.T. (T102)
14. FM IFT (T103)
15. RIPPLE FILTER (C915)
16. FM IFT (T104)
17. AM FM FRONT END
18. AM I.F.T. (T204)
19. AC LINE CORD
20. AM I.F.T. (T201)
21. AM I.F.T. (T202)
22. AM I.F.T. (T203)
23. AM LOOP STICK ANTENNA (L901)
24. POWER TRANSISTOR (L-CHAN TR901)
25. POWER TRANSISTOR (L-CHAN TR902)
26. IDLING ADJ
27. DC BALANCE ADJ. (L-CHAN TR901)
28. INPUT TAPE OUT PINJACK
29. PRE AMP P.C.B. HOLDER
30. PRE AMP P.C.B.
31. 19 KHz TRANSFORMER (T301)
32. 67 KHz S.C.A. COIL
33. DOUBLER TRANSFORMER (T302)
34. SEPARATION CONTROL (VR301)
35. 72 KHz S.C.A. COIL
36. 19 KHz COIL (L301)
37. DIAL LAMP HOUSE

www.hifiengine.com

BOTTOM VIEW

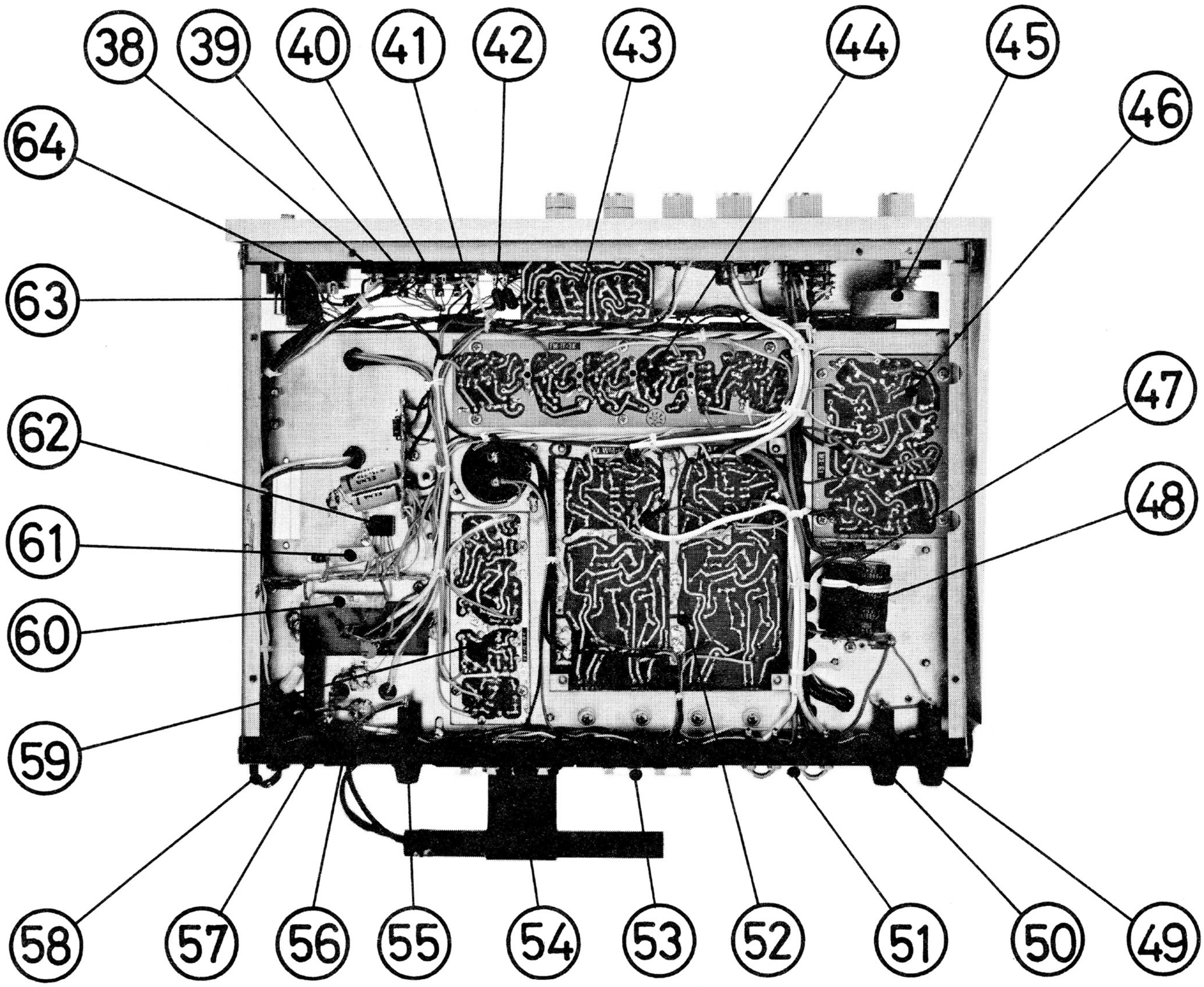

(38) SPEAKER-1 SWITCH
(39) SPEAKER-2 SWITCH
(40) STEREO SWITCH
(41) SOURCE SWITCH
(42) CONTOUR SWITCH
(43) TONE CONTROL P.C.B.
(44) FM IF P.C.B.
(45) FLY WHEEL
(46) M.P.X. P.C.B.
(47) 35V 1000μ } (C914) 35V2200μ
(48) 35V 1000μ
(49) SPEAKER FUSE (L-CHAN)
(50) SPEAKER FUSE (R-CHAN)
(51) PRE OUT MAIN IN PINJACK
(52) AF P.C.B.
(53) SPEAKER SYSTEM-1
(54) SPEAKER SYSTEM-2
(55) AC FUSE
(56) AC OUTLET
(57) ANTENNA TERMINAL STRIP
(58) AC LINE CORD
(59) AM IF P.C.B
(60) R931
(61) R930
(62) RECTIFIER
(63) POWER SWITCH
(64) HEAD PHONE JACK

www.hifiengine.com

AM/FM FRONT END (32SN2F1-351)
SCHEMATIC — MODEL 330A

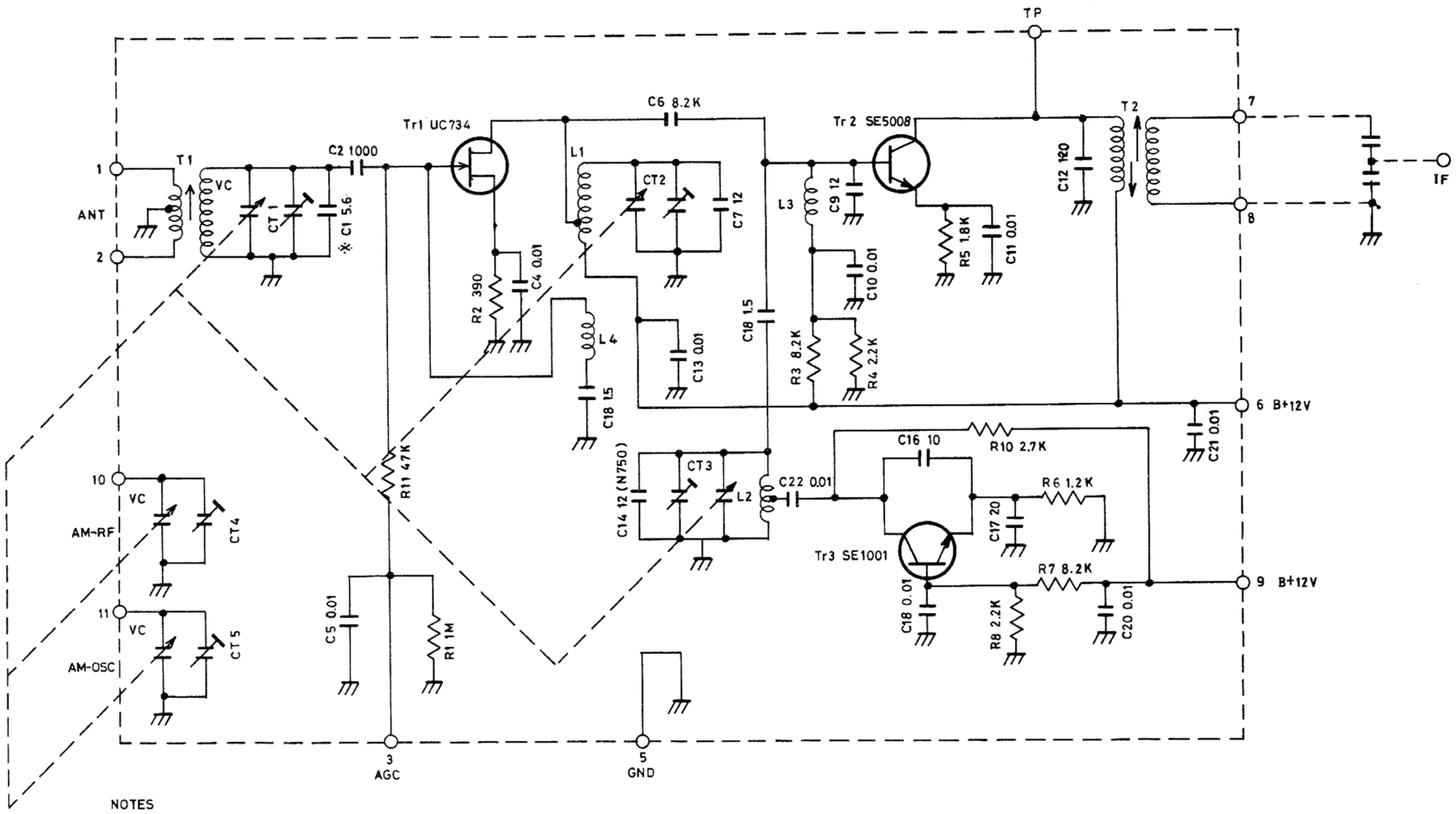

NOTES

1. ALL CAPACITANCE VALUES IN μμF EXCEPT DECIMAL VALUES IN MF.
2. ALL RESISTANCE VALUES IN OHMS.
3. ※ VALUE SELECTED AT FACTORY AVERAGE VALUE SHOWN.

AM/FM FRONT END (32SN2F1-351)

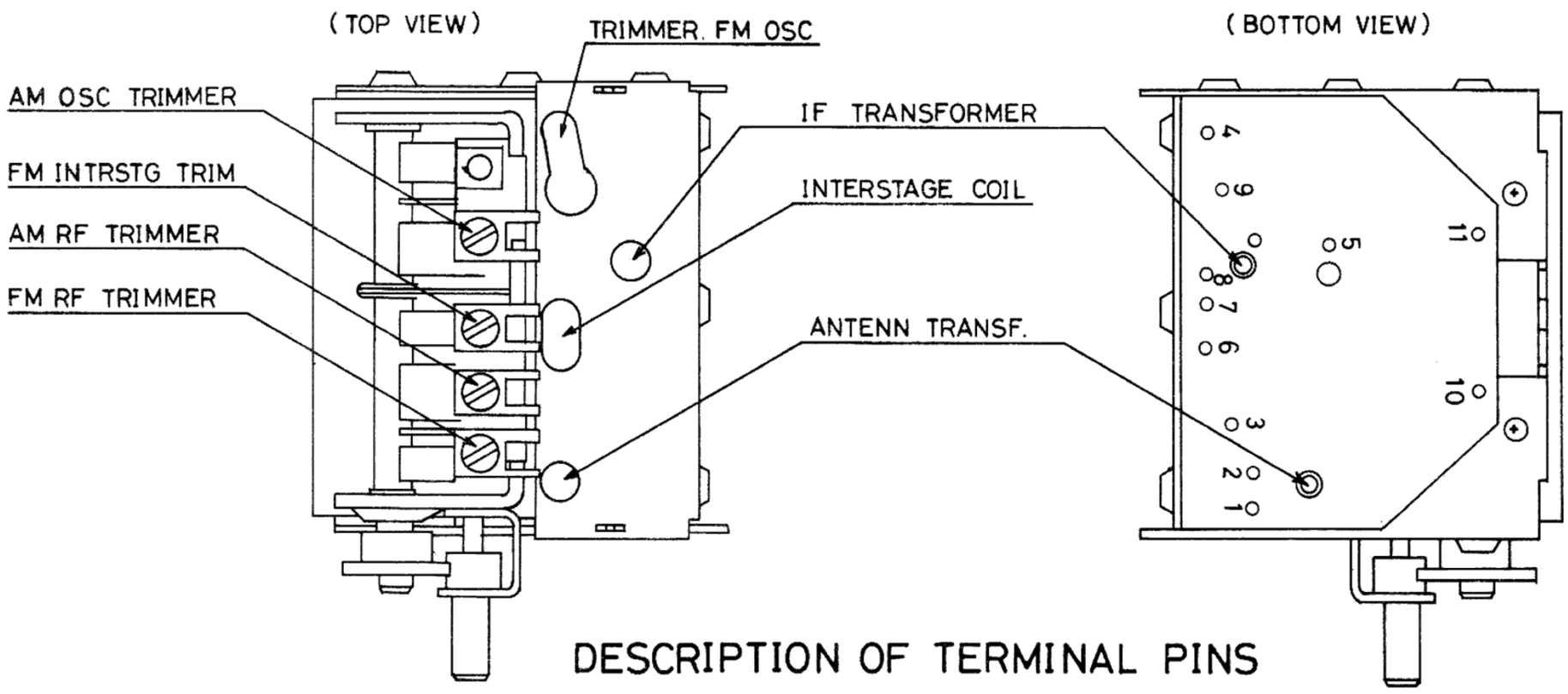

DESCRIPTION OF TERMINAL PINS

NO. 1.2	ANTENNA	NO. 7	IF "COLD"
3	AGC	8	IF "HOT"
4	AFC	9	B+ OSC
5	PW GND	10	AM RF
6	B+ RF-MIX	11	AM OSC

www.hifiengine.com

SCHEMATIC DIAGRAM — MODEL 330A

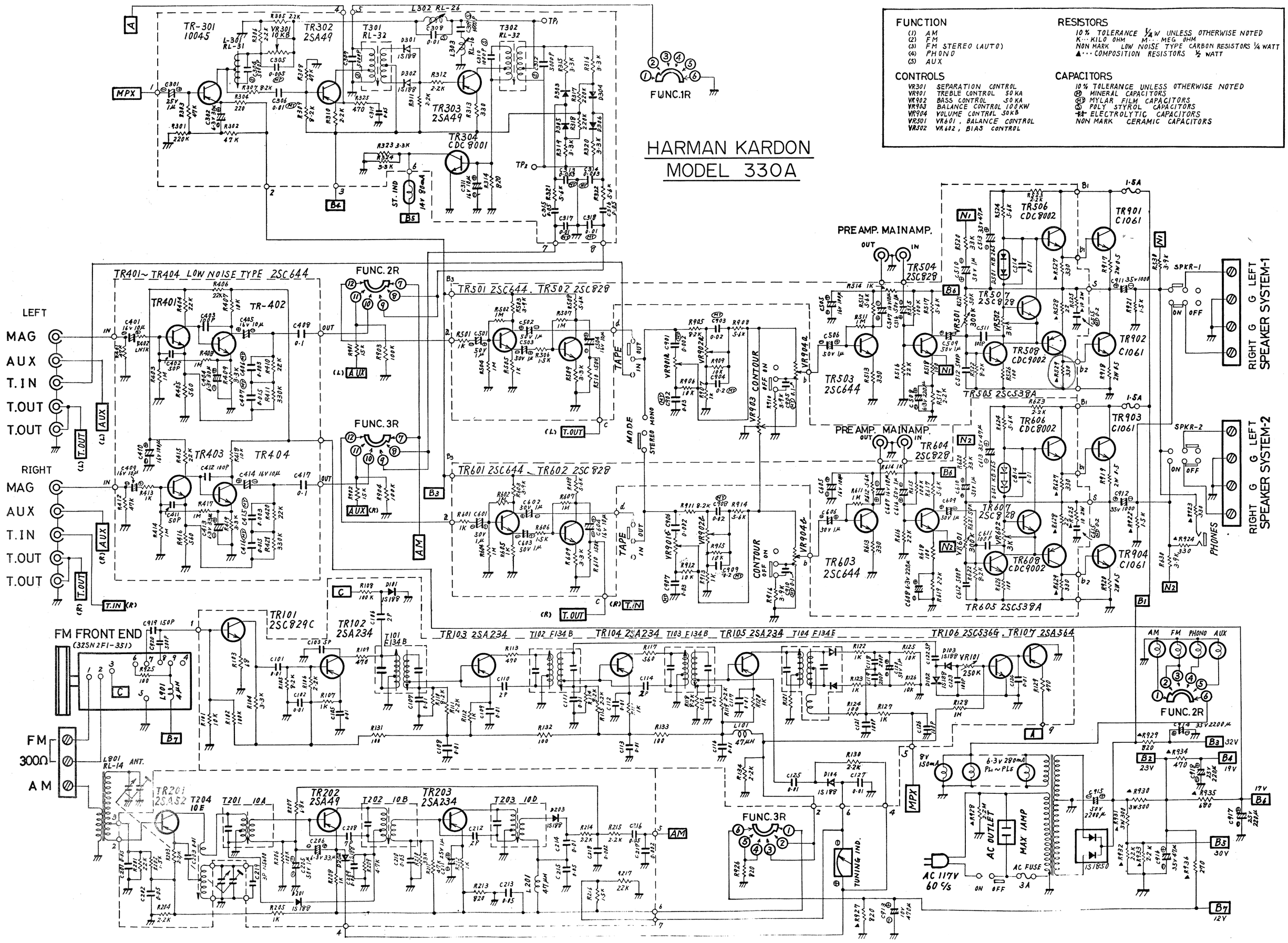

PREDRIVER BOARD

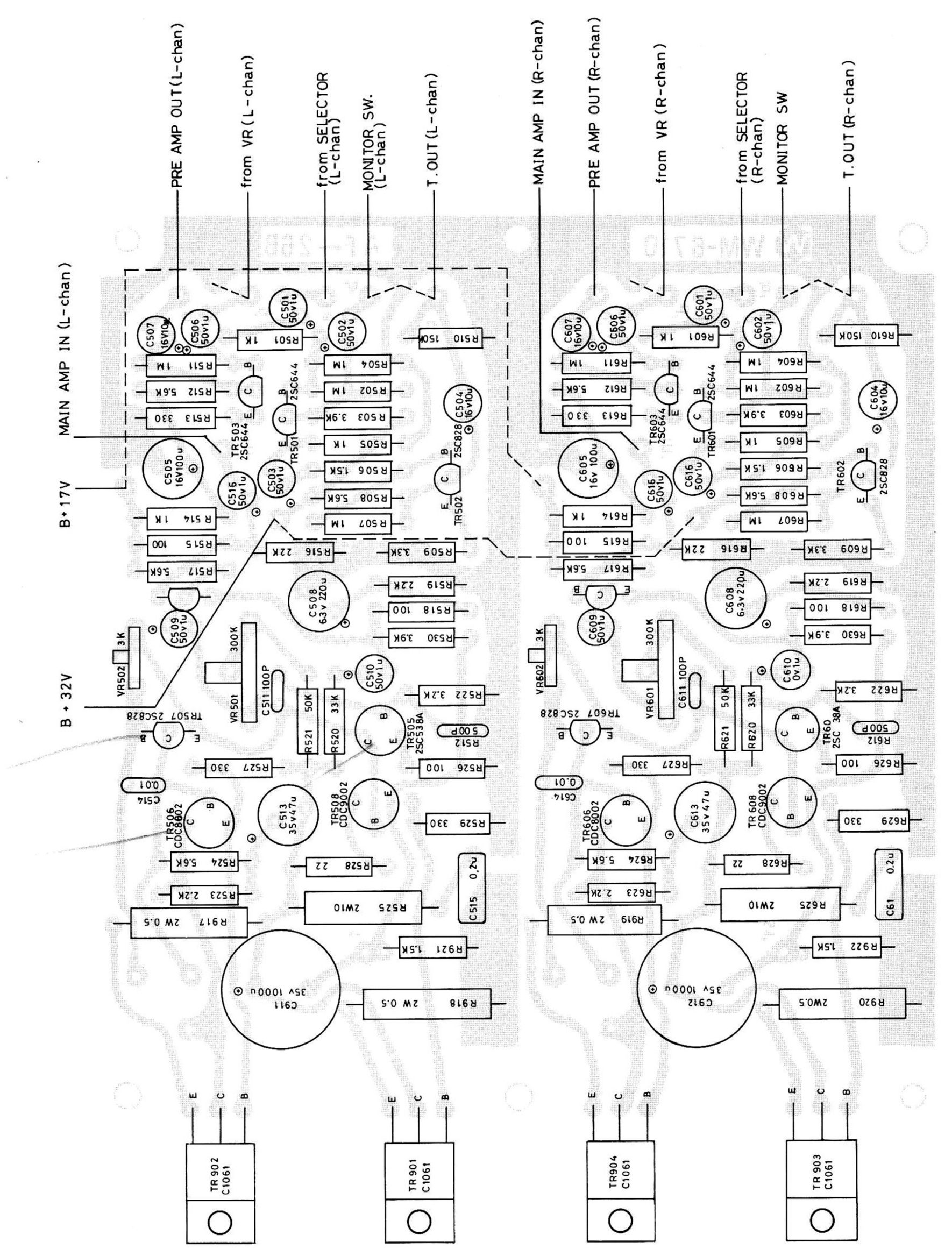

www.hifiengine.com

TONE CONTROL BOARD

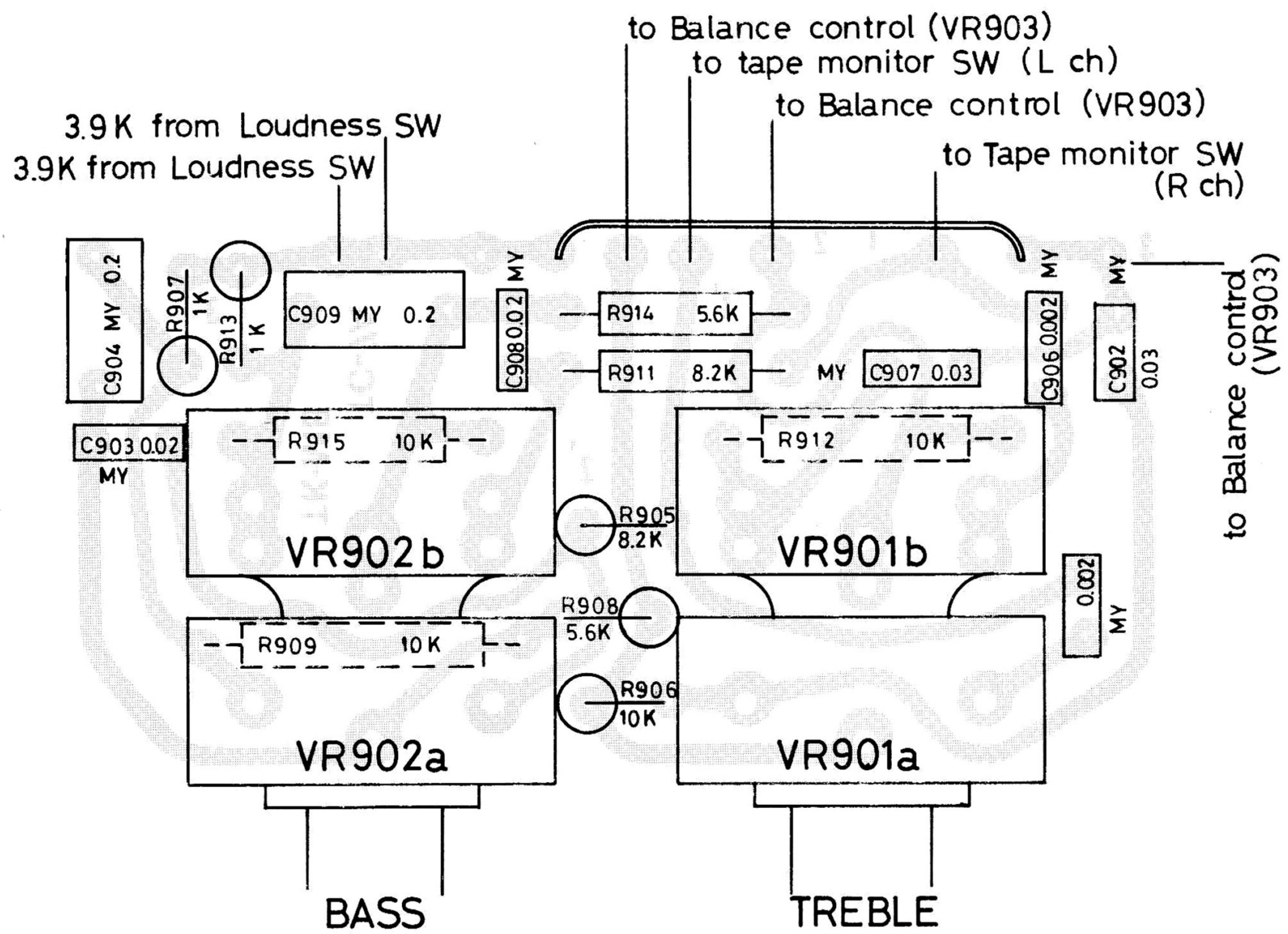

STRINGING DIAGRAM

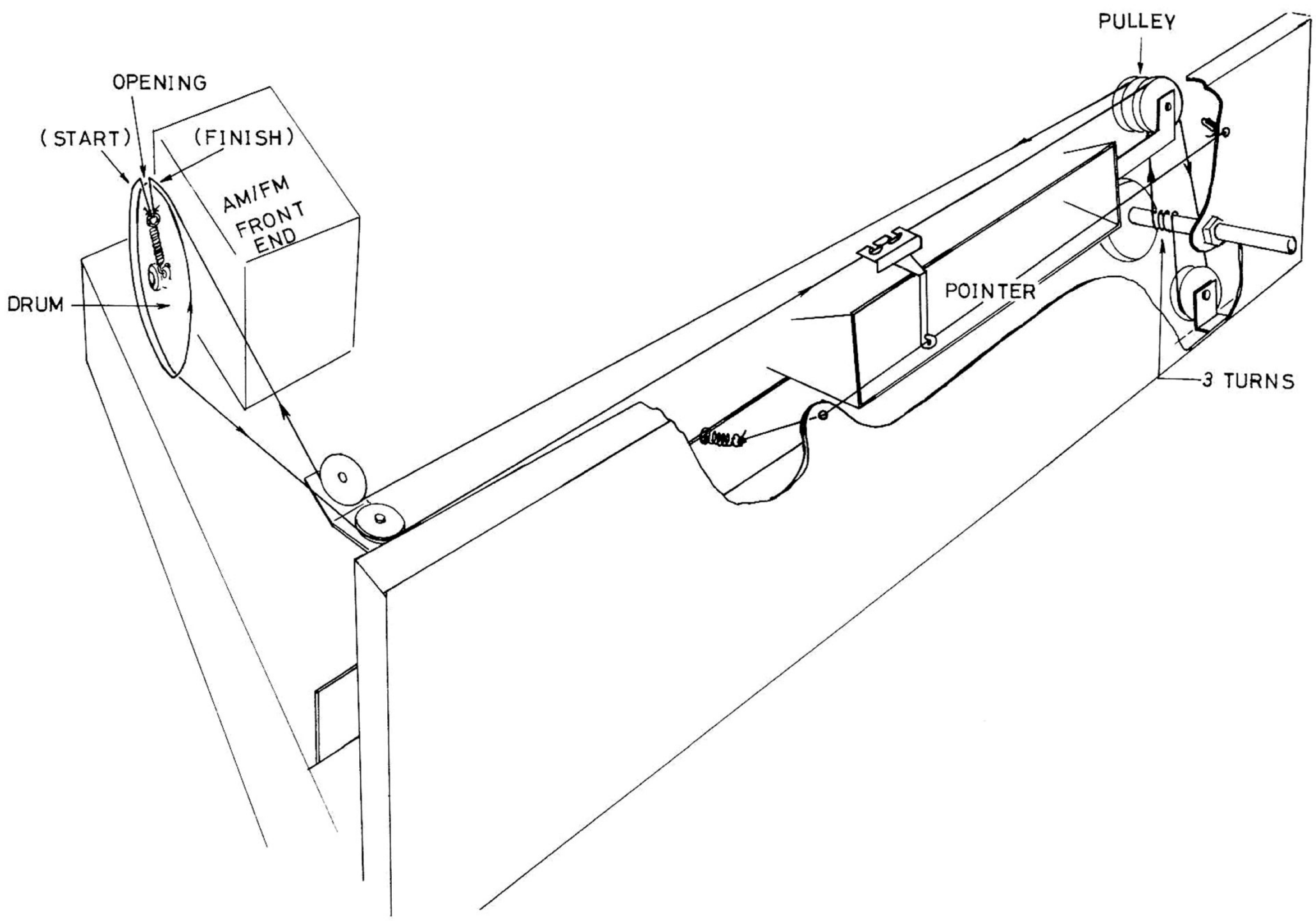

www.hifiengine.com

REPLACEMENT PARTS LIST

HK PART NO.	REF. NO.	DESCRIPTION
TRANSFORMERS & COILS		
10127932	HK-330	Power Transformer
11024829	L03-0010	Transformer, IFT-AM 10A
11024830	L03-0011	Transformer, IFT-AM 10B
11024831	L03-0013	Transformer, IFT-AM 10D
12027934	10-E	AM Osc. Coil
11024846	L04-0010	Transformer, IFT-FM F134B
11024847	L04-0011	Transformer, IFT-FM F134E
12027935	L-301	Coil, 19KC MPX RL-31
12027936	T-301, T-302	Coil, 38KC MPX RL-32
12024856	L-303	Coil, SCA Filter RL-16
12027937	L-302	Coil, SCA Filter RL-26
DIODES		
41624836	D-303, 306	Diode SD-46
41627989	D-501, 601	Diode KB-265
42024925	——	Diode Zener IN754A
41027991	——	Diode Rectifier IS-1850
41027992	——	Diode IS-188
CONTROLS		
23525118	VR-301	MX Trim Pot 10K
22025121	VR-904	Volume Control 50K
22027926	VR-901, 902	Bass & Treble 50K
22027986	VR501, 601	Balance Control 100K
TRANSISTORS		
43024833	TR-201	Transistor, AM 2SA52
43024834	TR-202, 302, 303	Transistor, AM 2SA49
43025336	TR-203	Transistor, AM & FM 2SA234
43025620	TR-101	Transistor, FM 2SA829
43025617	TR-106	Transistor, 2SA536G
43025613	TR-107	Transistor, 2SA564
43025972	TR-304	Transistor, Beacon CDC8001
43027722	TR-301	Transistor, MPX
43024873	TR-503, 603	Transistor, Audio 2SC644
43024859	TR-504, 507 604, 607	Transistor, Audio 2SC828
43024878	TR-505, 605	Transistor, Audio 2SC538A
43024879	TR-506, 606	Transistor, Driver NPN CDC8002
43024880	TR-508, 608	Transistor, Driver PNP CDC 9002
43027987	TR-901, 904	Transistor, Output C1061
MISCELLANEOUS		
00224887	UA-0003	AM/FM Front End
65424895	S-2032	Fuse Holder
65424896	S-2041	AC Outlet
45012953	M-5011	Fuse 1.5A
45024898	M-5013	Fuse 3A
61027988	——	Top Plexiglas
00227919	——	Escutcheon Assy.
60424911	4B6-12A	Tuning Shaft
60424912	M-2101	Flywheel
12524913	I-1015	Tuning Meter
24024914	S-1022	Function Switch
25527920		Rocker Switch (5 used)
25027921	UE-H12	Power Switch
65424917	E-4001	Headphone Jack
60724954	3BM-4	Dial Pointer
46527928	——	Meter Bulb, 6V-280 MA
46527929	——	Function Indicator Bulbs, 8V-150 MA
46527892	——	Stereo Beacon, 14V - 80MA
63227922	C641-B	Tuning Knob
63227923	C640-D	Knob, Single
63227924	C642-A	Knob Dual, Front
63227925	C642-B	Knob Dual, Rear

www.hifiengine.com

harman/kardon 55 AMES COURT, PLAINVIEW, N.Y. 11803

90727811

PRINTED IN U. S. A.

www.hifiengine.com