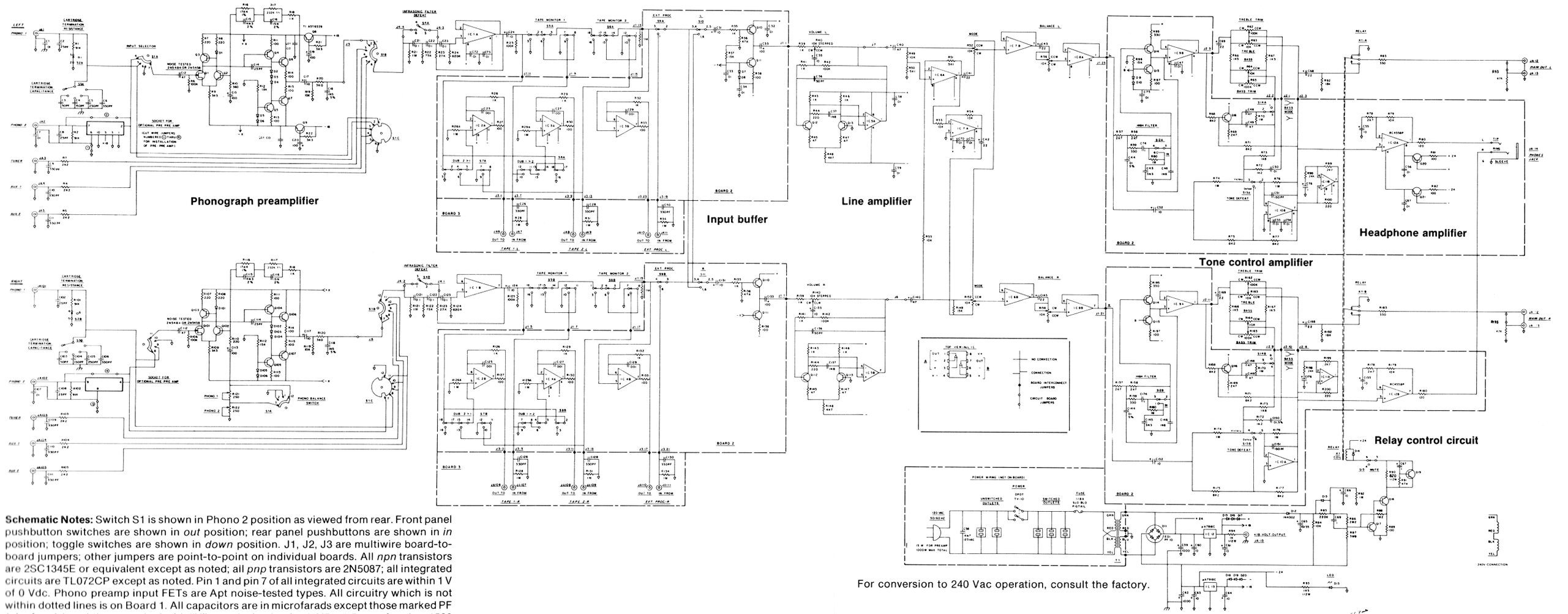

Schematic Notes: Switch S1 is shown in Phono 2 position as viewed from rear. Front panel pushbutton switches are shown in *out* position; rear panel pushbuttons are shown in *in* position; toggle switches are shown in *down* position. J1, J2, J3 are multiwire board-to-board jumpers; other jumpers are point-to-point on individual boards. All *npn* transistors are 2SC1345E or equivalent except as noted; all *pnp* transistors are 2N5087; all integrated circuits are TL072CP except as noted. Pin 1 and pin 7 of all integrated circuits are within 1 V of 0 Vdc. Phono preamp input FETs are Apt noise-tested types. All circuitry which is not within dotted lines is on Board 1. All capacitors are in microfarads except those marked PF (picofarads) and those marked with "N" as a decimal point (1N5 = 1.5 nanofarads = 1500 picofarads). For resistors, K = kohms, M = megohms. Thus 3M3 = 3.3 megohms.